Inxpect SRE 200 Series

SRE - Safety Radar Equipment

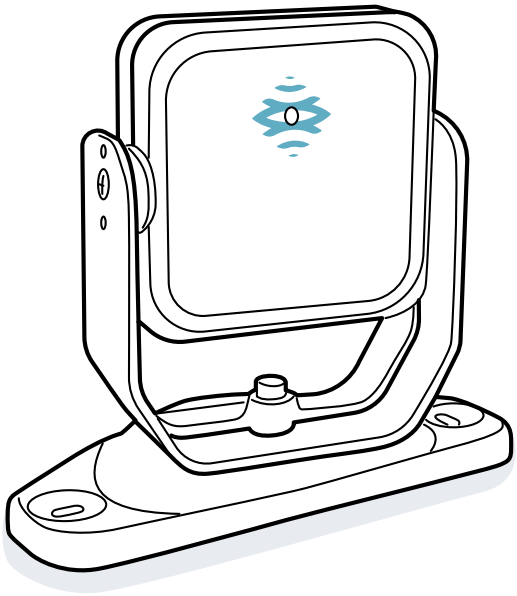

Instruction manual
v1.12 - EN

Original instructions

WARNING! Anyone who uses this system must read the instruction manual to ensure safety. Read and adhere to the "Safety information" chapter in its entirety before using the system for the first time.

Copyright © 2021-2026, Inxpect SpA

All rights reserved in all countries.

Any distribution, alteration, translation or reproduction, partial or total, of this document is strictly prohibited unless with prior authorization in writing from Inxpect SpA, with the following exceptions:

- Printing the document in its original format, totally or partially.
- Transferring the document on websites or other electronic systems.
- Copying contents without any modification and stating Inxpect SpA as copyright owner.

Inxpect SpA reserves the right to make modifications or improvements to the relative documentation without prior notice.

Requests for authorizations, additional copies of this manual or technical information about this manual must be addressed to:

Inxpect SpA
Via Serpente, 91
25131 Brescia (BS)
Italy
safety-support@inxpect.com
+39 030 5785105

Contents

Glossary of terms ..... **vi**

1. Introduction **9**

1.1 This manual **9**
1.1.1 Objectives of this instruction manual 9
1.1.2 Obligations with regard to this manual 9
1.1.3 Provided documentation 9
1.1.4 Instruction manual updates 10
1.1.5 Intended users of this instruction manual 11

1.2 Safety **12**
1.2.1 Safety information 12
1.2.2 Conformity 15

2. Get to know Inxpect SRE 200 Series **17**

2.1 System components **17**
2.1.1 Inxpect SRE 200 Series 17
2.1.2 Control units 19
2.1.3 Sensors 21
2.1.4 Configuration tools 23

2.2 Functioning principles **24**
2.2.1 Sensor functioning principles 24
2.2.2 Field of view 25
2.2.3 Detection fields 25

2.3 Sensing safety functions **28**
2.3.1 Safety working modes and safety functions 28
2.3.2 Safety working mode: Access detection and restart prevention (default) 28
2.3.3 Safety working mode: Always-on access detection 29
2.3.4 Safety working mode: Always-on restart prevention 30

2.4 Additional safety functions **31**
2.4.1 Stop signal 31
2.4.2 Restart signal 31
2.4.3 Muting 34
2.4.4 Dynamic system configuration 36
2.4.5 Fieldbus controlled 38

2.5 Other functions **39**
2.5.1 Restart prevention function: static object detection option 39
2.5.2 Teach-In function 40
2.5.3 Anti-tampering functions: anti-rotation around axes 45
2.5.4 Anti-tampering functions: anti-masking 46
2.5.5 System recondition 48
2.5.6 Electromagnetic robustness 49
2.5.7 Surface moisture robustness 49

2.6 Applications **50**
2.6.1 Basic concepts 50
2.6.2 Stationary application 51
2.6.3 Mobile application 51

2.7 Digital I/O interfaces **51**
2.7.1 Digital inputs 52
2.7.2 Digital outputs 53

2.8 Data exchange interfaces **56**
2.8.1 Fieldbus communication (PROFIsafe) 56
2.8.2 Fieldbus communication (Safety over EtherCAT® - FSoE) 59
2.8.3 Fieldbus communication (CIP Safety™ on EtherNet/IP™) 60

2.8.4 MODBUS communication ... 62

3. Installation and usage ... 64

3.1 Installation and use procedures ... 64
3.1.1 Before installation ... 64
3.1.2 Install Inxpect SRE 200 Series ... 64
3.1.3 Set the sensor inclination with a 1° precision ... 71
3.1.4 Configure Inxpect SRE 200 Series ... 74
3.1.5 Validate the safety functions ... 75
3.1.6 Fieldbus network integration ... 78
3.1.7 Other procedures ... 79

3.2 Use Inxpect Safety application ... 80
3.2.1 Get to know Inxpect Safety ... 80
3.2.2 Configure the system ... 81
3.2.3 Validate the safety functions ... 83
3.2.4 Manage the configuration ... 83

3.3 Use Inxpect Safety Studio application ... 84
3.3.1 Get to know Inxpect Safety Studio ... 85
3.3.2 Configure the system ... 85
3.3.3 Manage the configuration ... 85

4. Maintenance and troubleshooting ... 87

4.1 LEDs ... 87
4.1.1 Control unit status LEDs ... 87
4.1.2 Control unit Fieldbus LEDs ... 88
4.1.3 Sensor status LEDs ... 91

4.2 Troubleshooting ... 91
4.2.1 Troubleshooting procedures ... 91
4.2.2 Event log management ... 95
4.2.3 INFO events ... 99
4.2.4 ERROR events (control unit) ... 102
4.2.5 ERROR events (sensor) ... 104
4.2.6 ERROR events (CAN bus) ... 106
4.2.7 Auto-resume ... 106

4.3 Maintenance ... 107
4.3.1 Planned maintenance ... 107
4.3.2 Extraordinary maintenance ... 107

5. Technical references ... 110

5.1 Data and parameters ... 110
5.1.1 Technical data ... 111
5.1.2 Digital input signals ... 116
5.1.3 Control units layout ... 129
5.1.4 Control unit parameters ... 132
5.1.5 Target position angle conventions ... 134
5.1.6 Separation distance calculation ... 134

5.2 Electrical installation ... 138
5.2.1 Terminal blocks and connector pin-outs ... 139
5.2.2 Electrical connections ... 141

6. Appendix A: sensor lines ... 149

6.1 Core line sensors: S201A ... 149
6.1.1 Main features ... 149
6.1.2 Sensor field of view ... 150
6.1.3 Installation recommendations for the stationary application ... 152

6.1.4 Installation recommendations for the mobile application 154
6.1.5 Range of distances 155
6.1.6 Configuration parameters 156
6.2 Pro line sensors: S201A-W, S203A-W, S203A-WT 159
6.2.1 Main features 159
6.2.2 Sensor field of view 161
6.2.3 Installation recommendations for the stationary application 165
6.2.4 Installation recommendations for the mobile application 168
6.2.5 Range of distances 169
6.2.6 Configuration parameters 170
6.2.7 Classic shape 171
6.2.8 Corridor shape 172
6.3 Omni line sensors: S202A-MC2 and S202A-MC4 173
6.3.1 Main features 173
6.3.2 Sensor field of view 174
6.3.3 Installation recommendations for the stationary application 175
6.3.4 Installation recommendations for the mobile application 176
6.3.5 Configuration parameters 176
6.3.6 Classic shape 178
6.3.7 Corridor shape 180
6.3.8 Range of distances 182
6.3.9 Cuboid shape 184
6.4 Plug&Safe sensors: S202A-MS 185
6.4.1 Main features 185
6.4.2 Installation recommendations 186
6.4.3 Configuration parameters 186
6.5 Plug&Safe sensors: S202A-MV 187
6.5.1 Main features 188
6.5.2 Installation recommendations 188
6.5.3 Configuration parameters 189

7. Appendix B 192
7.1 Other information 192
7.1.1 System software 192
7.1.2 Disposal 193
7.1.3 Service and warranty 193
7.1.4 Intellectual property 193
7.1.5 Checklist for installing ESPE 194

Glossary of terms

A

Activated output (ON-state)

Output that switches from OFF to ON-state.

D

Dangerous area

Area to be monitored because it is dangerous for people.

Deactivated output (OFF-state)

Output that switches from ON to OFF-state.

Detection distance x

Depth of the field of view configured for detection field x.

Detection field x

Portion of the field of view of the sensor. Detection field 1 is the field closer to the sensor.

Detection signal group 1

Output signal (dual channel) that describes the monitoring status of the detection fields belonging to group 1.

Detection signal group 2

Output signal (dual channel) that describes the monitoring status of the detection fields belonging to group 2.

Detection signal x

Output signal (dual channel) that describes the monitoring status of the detection field x.

Detection warning group 1

Output signal (single channel) that describes the monitoring status of the detection fields belonging to group 1.

Detection warning group 2

Output signal (single channel) that describes the monitoring status of the detection fields belonging to group 2.

Detection warning x

Output signal (single channel) that describes the monitoring status of the detection field x.

E

ESPE (Electro-Sensitive Protective Equipment)

Device or system of devices used for the safety-related detection of people or parts of the body. ESPEs provide personal protection at machines and plants/systems where there is a risk of physical injury. These devices/systems cause the machinery or plant/system to switch over to a safe status before a person is exposed to a dangerous situation.

F

Field of view

Sensor area within which the detection field/s can be defined.

Fieldset

Structure of the field of view which can be composed of up to four detection fields.

FMCW

Frequency Modulated Continuous Wave

G

Gray area

Area of the field of view where detection or not of a moving object/person depends on the characteristics of the same object itself.

H

Horizontal angular coverage

Property of the field of view that corresponds to the coverage on the horizontal plane.

I

Inclination

Sensor rotation around the y-axis. The sensor inclination is the angle between a line perpendicular to the sensor and a line parallel to the ground.

M

Machinery

The system for which the dangerous area is monitored.

Monitored area

Area that is monitored by Inxpect SRE 200 Series. It is composed of all the fields of all the sensors.

O

OSSD

Output Signal Switching Device

R

RCS

Radar Cross-Section. Measure of how detectable an object is by radar. It depends, among other factors, on the material, dimension and position of the object.

Reference plane

Plane where the person to be detected walks or stands.

S

Safe state

System state for motion detection, failure, stop signal or configuration in progress. If the system is in this state, the machinery system must put the area into a safe condition and/or prevent the machinery from restarting.

System application

Configuration tool for configuring and validating the system.

V

Vertical angular coverage

Property of the field of view that corresponds to the coverage on the vertical plane.

1. Introduction

Contents

This part includes the following topics:

1.1 This manual **9**
1.2 Safety **12**

1.1 This manual

1.1.1 Objectives of this instruction manual

This manual explains how to integrate Inxpect SRE 200 Series to safeguard the machinery operators and how to install, use and maintain them safely.

This document includes all the information as Safety Manual according to IEC 61508-2/3 Annex D. Please refer in particular to "Safety parameters" on page 111 and to "System software" on page 192.

The functioning and safety of the machinery to which Inxpect SRE 200 Series is connected is out of the scope of this document.

1.1.2 Obligations with regard to this manual

NOTICE: *this manual is an integral part of the product and must be kept for its entire working life.*

It must be consulted for all situations related to the life cycle of the product, from its delivery to decommissioning.

It must be stored so that it is accessible to operators, in a clean location and in good condition.

In the event of manual loss or damage, contact Technical Support (see "Service and warranty" on page 193).

Always make the manual available for consultation when the equipment is sold.

1.1.3 Provided documentation

The following documents are available for download from the site https://tools.inxpect.com.

Document	Code	Date
Instruction manual (this manual)	Inxpect SAF-IM-200S_7_00047_en	JUL 2026
Instruction manual - 9 meters range sensors	Inxpect SAF-IM-200S_9m_7_00240_en	MAY 2026
Installation instructions	Inxpect SAF-MI-100S-200S_26000041_7_00046_multi	OCT 2025
PROFIsafe communication Reference guide	Inxpect 100S_200S PROFIsafe RG_7_00067_en	MAY 2026
FSoE communication Reference guide	Inxpect 100S_200S FSoE RG_7_00237_en	DEC 2025
CIP Safety communication Reference guide	Inxpect 100S_200S CIP RG_7_00326_en	MAY 2026
MODBUS communication Reference guide	Inxpect 100S_200S MODBUS RG_7_00075_en	MAY 2026
National configuration addendum	Inxpect 200S National configurations addendum_7_00079_multi	-
Inxpect Safety Studio User manual	Inxpect SAF-UM-00434_en	AGO 2025

Document	Code	Date
Cable validator	Inxpect 100S_200S Cable Validator tool_7_00066_en	-
200S Inxpect Spare Parts	Inxpect 200S Spare Parts_7_00330_en	-

1.1.4 Instruction manual updates

Publication date	Code	Hardware version	Firmware version	Updates
JUL 2026	Inxpect SAF-IM-200S_7_00047_en_v1.12	Control units: • Type A: 2.3 • Type B: 2.4 Sensors: • S201A model: 2.2 • S203A model : 1.0 • S202A model: 1.1	Control units: • Core Line: 2.0.1 • eXtended Line: 2.1.1 Sensors: • S201A: 3.2 • S201A-W: 5.1 • S203A-W/S203A-WT: 5.1 • S202A: 1.0	Minor changes.
MAY 2026	Inxpect SAF-IM-200S_5m_7_00047_en_v1.11	Control units: • Type A: 2.3 • Type B: 2.4 Sensors: • S201A model: 2.2 • S203A model : 1.0 • S202A model: 1.1	Control units: • Core Line: 2.0.1 • eXtended Line: 2.1.1 Sensors: • S201A: 3.2 • S201A-W: 5.1 • S203A-W/S203A-WT: 5.1 • S202A: 1.0	Removed S202A-MC1 sensors. Added S203A-WT and S203A-WLT sensors. Updated installation recommendations for stationary application - restart prevention function. Reference to Cable validator for total length of the CAN bus line. Updated the description of the system recondition function. Fixed parameters min, max, default values or application paths. Other minor changes.
DEC 2025	Inxpect SAF-IM-200S_5m_7_00047_en_v1.10	Control units: • Type A: 2.3 • Type B: 2.4 Sensors: • S201A model: 2.2 • S203A model : 1.0 • S202A model: 1.1	Control units: • Core Line: 2.0.1 • eXtended Line: 2.1.1 Sensors: • S201A: 3.2 • S201A-W: 5.1 • S203A-W: 5.1 • S202A: 1.0	Added sensors: S202A-MC1, S202A-MC2, S202A-MC4. Added screw specifications for 3-axis bracket, see "Pin Hex button head security screw" on page 114. Added Siemens PLC and TIA Portal compatibility, see "Siemens PLC and TIA Portal compatibility" on page 56.
SEP 2025	Inxpect SAF-IM-200S_5m_7_00047_en_v1.9	Control units: • Type A: 2.3 • Type B: 2.4 Sensors: • S201A model: 2.2 • S203A model : 1.0 • S202A model: 1.1	Control units: • Core Line: 2.0.1 • eXtended Line: 2.1.1 Sensors: • S201A: 3.2 • S201A-W: 5.1 • S203A-W: 5.1 • S202A: 1.0	Added Always-on restart prevention safety working mode. Reorganization of the manual content. Added Surface moisture robustness function. Renamed sensor axes. Integrated S202A sensors position and configuration. Added US patents. Updated Operating System requirements. Made explicit control unit lines. Removed Environmental robustness function. Removed "5m sensors" denomination.

***Note**: the control unit firmware can be updated via the system application. The latest firmware version available contains the features described in the manual at the system level. The sensor firmware cannot be updated.*

***NOTICE:** control unit firmware update can only be performed on firmware versions of the same production line.*

1.1.5 Intended users of this instruction manual

The recipients of the instruction manual are:

- the machinery manufacturer onto which the system will be installed
- system installer
- machinery maintenance technician

1.2 SAFETY

1.2.1 Safety information

1.2.1.1 SAFETY MESSAGES

Warnings related to the safety of the user and of the equipment as envisaged in this document are as follows:

WARNING! Indicates a hazardous situation which, if not avoided, may cause death or serious injury.

NOTICE: *indicates obligations that if not observed may cause harm to the equipment.*

1.2.1.2 SAFETY SYMBOLS ON THE PRODUCT

This symbol marked on the product indicates that the manual must be consulted. In particular, pay attention to the following activities:

- wiring of the connections (see "Terminal blocks and connector pin-outs" on page 139 and "Electrical connections" on page 141)
- cable operating temperature (see "Terminal blocks and connector pin-outs" on page 139)
- control unit cover, which was subjected to a low energy impact test (see "Technical data" on page 111)

1.2.1.3 PERSONNEL SKILLS

The recipients of this manual and the skills required for each activity presented herein are as follows:

Recipient	Assignments	Skills
Machinery manufacturer	• defines which protective devices should be installed and sets the installation specifications	• knowledge of significant hazards of the machinery that must be reduced based on risk assessment • knowledge of the entire machinery safety system and the system on which it is installed
Protection system installer	• installs the system • configures the system • prints configuration reports	• advanced technical knowledge in the electrical and industrial safety fields • knowledge of the dimensions of the dangerous area of the machinery to be monitored • receives instructions from the machinery manufacturer
Machinery maintenance technician	• performs maintenance on the system	• advanced technical knowledge in the electrical and industrial safety fields

1.2.1.4 SAFETY ASSESSMENT

Before using a device, a safety assessment in accordance with the Machinery Directive is required.

The product as an individual component fulfills the functional safety requirements in accordance with the standards stated in "Standards and Directives" on page 15. However, this does not guarantee the functional safety of the overall plant/machinery. To achieve the required safety level for the overall plant/machinery, each safety function needs to be considered separately.

1.2.1.5 INTENDED USE

Inxpect SRE 200 Series is a human body detection system, certified SIL 2 according to IEC/EN 62061, PL d according to EN ISO 13849-1 and Performance Class D according to IEC TS 62998-1.

It performs the following safety functions:

- **Access detection function**: access of one or more persons to a hazardous area transitions the system to safe state to stop the moving parts of the machinery.
- **Restart prevention function**: prevents unexpected starting or restarting of the machinery. Detection of motion within the dangerous area maintains the system safe state to prevent machinery starting.

It performs the following additional safety functions:

- **Stop signal** (Category 3, according to EN ISO 13849-1): it forces the system transition to the safe state (see "Stop signal" on page 31).
- **Restart signal** (Category 3, according to EN ISO 13849-1, Category 2, according to EN ISO 13849-1 using single channel digital output): it enables the system transition from the safe state to the normal state, and the safety outputs related to all the detection fields with no motion detected to switch to the ON-state (see "Restart signal" on page 31).
- **Muting** (Category 3, according to EN ISO 13849-1): it inhibits the detection capability of one or a group of sensors (see "Muting" on page 34).
- **Dynamic configuration switch** (Category 3, according to EN ISO 13849-1): it allows the dynamic switch among previously set configurations (see "Dynamic system configuration" on page 36).
- **Fieldbus controlled** (Category 3, according to EN ISO 13849-1, Category 2, according to EN ISO 13849-1 using single channel digital output): it monitors the input status via Fieldbus communication (see "Fieldbus controlled" on page 38).

  WARNING! the following faults makes the Fieldbus controlled additional safety function unavailable: POWER ERROR, TEMPERATURE ERROR, FIELDBUS ERROR, PERIPHERAL ERROR, FEE ERROR and FLASH ERROR.

WARNING! only for Stop signal, Restart signal, Muting and Dynamic configuration switch. Any fault on the sensors or the control unit brings the system to the safe state and makes the additional safety functions unavailable.

Inxpect SRE 200 Series is suitable for protecting the human body in the following scenarios:

- dangerous area protection in stationary and mobile applications
- indoor and outdoor applications

Inxpect SRE 200 Series meets requirements of applications safety functions that require a risk reduction level of:

- up to SIL 2, HFT = 0 according to IEC/EN 62061
- up to PL d, Category 3 according to EN ISO 13849-1
- up to Performance Class D according to IEC TS 62998-1

Inxpect SRE 200 Series, in combination with additional risk reduction means, can be used for applications safety functions that require higher risk reduction levels.

1.2.1.6 IMPROPER USE

WARNING! Unauthorized modifications may compromise the safety performance of the product. Unless explicitly specified in this document, do not attempt to repair, disassemble, or otherwise interfere with the product.

The following is deemed improper use in particular:

- any component, technical or electrical modification to the product
- use of the product outside the areas described in this document
- use of the product outside the technical details, see "Technical data" on page 111

1.2.1.7 EMC-COMPLIANT ELECTRICAL INSTALLATION

NOTICE: *The product is designed for use in an industrial environment. The product may cause interference if installed in other environments. If installed in other environments, measures should be taken to comply with the applicable standards and directives for the respective installation site with regard to interference.*

1.2.1.8 GENERAL WARNINGS

- Incorrect installation and configuration of the system decreases or inhibits the protective function of the system. Follow the instructions provided in this manual for correct installation, configuration and validation of the system.
- Changes to the system configuration may compromise the protective function of the system. After any changes made to the configuration, validate correct functioning of the system by following the instructions provided in this manual.
- If the system configuration allows access to the dangerous area without detection, implement additional safety measures (e.g., guards).
- The presence of static objects, in particular metallic objects, within the field of view may limit the efficiency of sensor detection. Keep the sensor field of view unobstructed.
- The system protection level (SIL 2, PL d) must be compatible with the requirements set forth in the risk assessment.
- Check that the temperature of the areas where the system is stored and installed is compatible with the storage and operating temperatures indicated in the technical data of this manual.
- Radiation from this device does not interfere with pacemakers or other medical devices.

1.2.1.9 WARNINGS FOR THE RESTART PREVENTION FUNCTION

- The restart prevention function is not guaranteed in blind spots. If required by the risk assessment, implement adequate safety measures in those areas.
- Machinery restarting must be enabled only in safe conditions. The button for the restart signal, when needed, must be installed:
  - outside of the dangerous area
  - not accessible from the dangerous area
  - in a point where the dangerous area is fully visible

1.2.1.10 RESPONSIBILITY

The machinery manufacturer and system installer are responsible for the operations listed below:

- Providing adequate integration of the safety output signals of the system.
- Checking the monitored area of the system and validating it based on the needs of the application and risk assessment.
- Following the instructions provided in this manual.

1.2.1.11 LIMITS

- If the static object detection option is disabled, the system cannot detect the presence of people who are immobile and not breathing or objects within the dangerous area.
- The system does not offer protection from pieces ejected from the machinery, from radiation, and objects falling from above.
- The machinery command must be electronically controlled.

1.2.1.12 DISPOSAL

In safety-related applications, comply with the mission time reported in "General specifications" on page 111.

For decommissioning follow the instructions reported in "Disposal" on page 193.

1.2.2 Conformity

1.2.2.1 STANDARDS AND DIRECTIVES

Directives	2006/42/EC (MD - Machinery) 2014/53/EU (RED - Radio equipment)
Harmonized standards for the Machinery Directive	EN ISO 13849-1: 2023 PL d EN ISO 13849-2: 2012 EN IEC 62061: 2021
Harmonized standards for the RED Directive	EN IEC 61000-6-2:2019 EN IEC 61326-3-1:2017 ETSI EN 301 489-1 v2.2.3: 2019 ETSI EN 301 489-3 v2.1.1: 2019 (emission only) ETSI EN 301 489-3 v2.3.2:2023 ETSI EN 305550-1 V1.2.1: 2014 ETSI EN 305550-2 V1.2.1: 2014 IEC/EN 61010-1: 2010 + A1:2019
Non-harmonized standards for Machinery Directive	EN IEC 61496-1: 2020 IEC TS 61496-5:2023 IEC TS 62998-1:2019 IEC/EN 61508: 2010 Part 1-7 SIL 2 EN IEC 61000-6-2:2019 (immunity) EN IEC 61326-3-1:2017 (immunity) UL 61010-1:2023 CAN/CSA 61010-1:2023 UL 61496-1:2021 EN IEC 61784-3-3:2021 for the PROFIsafe Fieldbus IEC/EN 61784-3-12:2010, A1:2019 for FSoE Fieldbus IEC/EN 61784-3-2:2021 for CIP Safety™ Fieldbus

***Note**: no type of failure has been excluded during the system analysis and design phase.*

All updated certifications can be downloaded from https://www.inxpect.com/en/downloads.

1.2.2.2 CE

The manufacturer, Inxpect SpA, states that Inxpect SRE 200 Series (Safety Radar Equipment) complies with the 2014/53/EU and 2006/42/EC directives. The full EU Declaration of Conformity text is available on the company's website: https://www.inxpect.com/en/downloads.

1.2.2.3 UKCA

The manufacturer, Inxpect SpA, states that Inxpect SRE 200 Series (Safety Radar Equipment) complies with Radio Equipment Regulations 2017 and Supply of Machinery (Safety) Regulations 2008. The full UKCA Declaration of Conformity text is available on the company's website: https://www.inxpect.com/en/downloads.

1.2.2.4 OTHER CONFORMITIES AND NATIONAL CONFIGURATIONS

For a complete, up-to-date list of product conformities and any national configurations, please refer to the National configuration addendum document. The PDF can be downloaded from the site https://tools.inxpect.com.

2. Get to know Inxpect SRE 200 Series

2.1 System components

Contents

This section includes the following topics:

2.1.1 Inxpect SRE 200 Series **17**
2.1.2 Control units **19**
2.1.3 Sensors **21**
2.1.4 Configuration tools **23**

Product label description

The following table describes the information contained in the product label:

Part	Description
SID	Sensor ID
DC	"yy/ww" : year and week of the product manufacture
SRE	Safety Radar Equipment
Model	Product model (e.g., S201A, C201A)
Type	Product variant indicating support for specific functionalities or information for commercial purposes
S/N	Serial number

2.1.1 Inxpect SRE 200 Series

2.1.1.1 Definition

Inxpect SRE 200 Series is an active protection radar system that monitors the dangerous areas of machinery.

2.1.1.2 Special features

Some of the special features of this protection system are the following:

- indication of current distance and angle of the targets detected by each sensor
- customization of the detection field with advanced shapes (if available)
- up to four safe detection fields to define different machinery behaviors
- programmable coverage angle for each detection field
- rotation around three axes during installation to allow better coverage of detection areas
- safety Fieldbus to safely communicate with the PLC of the machinery (if available)
- possibility to switch dynamically between different preset configurations (max. 32 through Fieldbus, if available, and max. 8 with digital inputs)
- muting on the entire system or on each sensor individually
- immunity to dust and smoke
- reduction of undesired alarms caused by the presence of water or processing waste
- communication and data exchange through MODBUS (if available)

2.1.1.3 Main components

Inxpect SRE 200 Series is composed of a control unit and up to six sensors. The system application allows system operation configuration and checks.

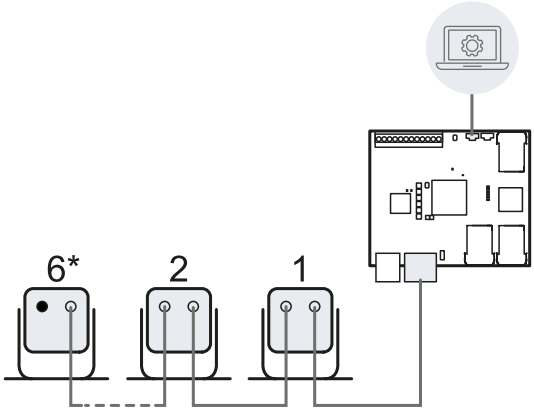

NOTICE*: *if at least one sensor is an S202A, the maximum number of sensors is 5.*

2.1.1.4 System status

The system can be in one of the following states:

State		Description	Status communication
Safe	Motion detected/Alarm	At least one detection field of one sensor has detected motion	• OFF-state of the related OSSDs, if configured as **Detection signal "N"**, **Detection warning "N"** or **Detection signal group "N"** • Safety stop signal message via Fieldbus protocol, if available • Sensor LED, see "Sensor status LEDs" on page 91 • Control unit LED, see "Control unit status LEDs" on page 87
Safe	Stop signal	The system received a stop signal	• OFF-state of all the OSSDs, if configured as **Detection signal "N"**, **Detection warning "N"** or **Detection signal group "N"** • Safety stop signal message via Fieldbus protocol, if available • Sensor LED, see "Sensor status LEDs" on page 91 • Control unit LED, see "Control unit status LEDs" on page 87
Safe	Fault	System failure	
Safe	Configuration in progress	A change in system configuration is in progress	
Normal		Not in any safe state	• OSSDs according to the status of the relative function. • Sensor LED, see "Sensor status LEDs" on page 91 • Control unit LED, see "Control unit status LEDs" on page 87

2.1.1.5 Control unit and sensor compatibility

The models and types of control unit and sensors are shown below, with their compatibility.

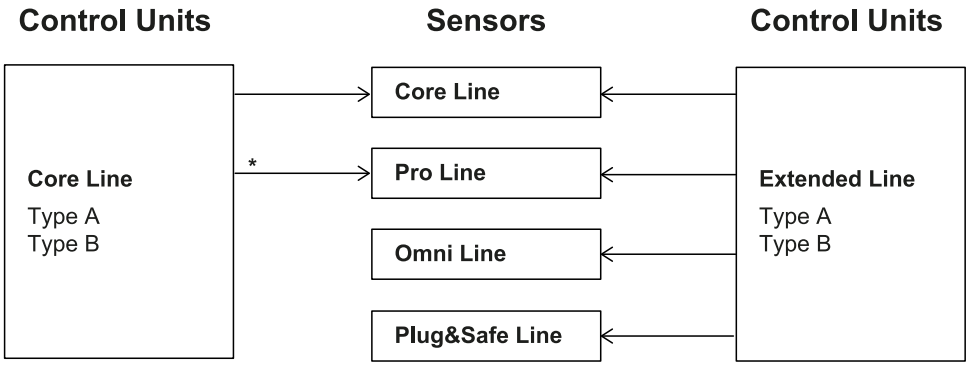

NOTICE: *do not connect the control unit with other types of sensors (e.g., 9 meters range sensors).*

The control unit can be simultaneously connected to sensors of different lines. For more details about the available features, see " Sensors" on page 21.

2.1.1.6 Control unit - sensor communication

The sensors communicate with the control unit via CAN bus using diagnostic mechanisms in compliance with standard EN 50325-5 to guarantee SIL 2 and PL d.

For correct function, each sensor must be properly identified with a different Node a . By default, the sensor does not have a pre-assigned Node ID.

2.1.1.7 Control unit - machinery communication

The control unit communicates with the machinery via I/O (see "Digital inputs" on page 52 and "Digital outputs" on page 53).

Moreover, according to the model-type, the control unit is provided with:

- a safe communication on a Fieldbus interface. The Fieldbus interface allows the control unit to communicate in real-time with the PLC of the machinery to send information about the system to the PLC (e.g., the position of the detected target) or to receive information from the PLC (e.g., to change the configuration dynamically). For details, see "Fieldbus communication (PROFIsafe)" on page 56, "Fieldbus communication (CIP Safety™ on EtherNet/IP™)" on page 60 or see "Fieldbus communication (Safety over EtherCAT® - FSoE)" on page 59.
- an Ethernet port that allows unsafe communication on a MODBUS interface (see "MODBUS communication" on page 62).

2.1.1.8 Applications

Inxpect SRE 200 Series integrates with the machinery control system: when Inxpect SRE 200 Series is in a safe state, the control system can place the area in a safe condition and/or prevent the machinery from restarting.

In the absence of other control systems, Inxpect SRE 200 Series can be connected to the devices that control the power supply or machinery start-up.

Inxpect SRE 200 Series does not perform normal machinery control functions.

For connection examples, see "Electrical connections" on page 141.

2.1.2 Control units

2.1.2.1 Control unit production lines

The Inxpect SRE 200 Series supports different control units:

Production line	Control unit model types	Firmware version
Core Line	Type A: C201A-PNS, C201A-F, C202A, C203A	2.0.1
	Type B: C201B-P, C201B-F, C202B, C203B	
eXtended Line	Type A: C201A-PX1, C201A-FX1, C202A-X1, C203A-X1	2.1.1
	Type B: C201B-PX1, C201B-FX1, C201B-C, C202B-X1, C203B-X1	

The main additional features of the eXtended Line control units are described below:

- compatibility with Inxpect Safety Studio application
- compatibility with S202A sensors
- detection warning signal: to use single-channel OSSD
- stop signal debounce filter

2.1.2.2 Interfaces

The following table lists connection ports, communication interfaces, and available microSD ports for each control unit model-type:

	Model	Type	micro-USB port	Ethernet port	Fieldbus port	microSD slot
Type A	C201A	-PNS -PX1	x	x	x (PROFIsafe)	-
	C201A	-F -FX1	x	x	x (FSoE)	-
	C202A	- -X1	x	x	-	-
	C203A	- -X1	x	-	-	-
Type B	C201B	-P -PX1	x	x	x (PROFIsafe)	x
	C201B	-F -FX1	x	x	x (FSoE)	x
	C201B	-C	x	x	x (CIP Safety™)	x
	C202B	- -X1	x	x	-	x
	C203B	- -X1	x	-	-	x

2.1.2.3 Communication architecture

Based on the model-type, this is the communication architecture between the control unit, PLC, and PC.

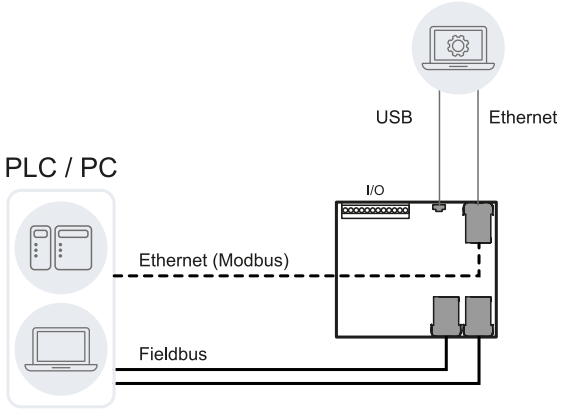

2.1.2.4 Functions

The control unit performs the following functions:

- Collects information from all the sensors via CAN bus.
- Compares the position of detected motion with the set values.
- Deactivates the selected safety output when at least one sensor detects motion in the detection field.
- Deactivates all the safety outputs if a failure is detected in one of the sensors or the control unit.
- Manages the inputs and outputs.
- Communicates with the system application for all configuration and diagnostic functions.
- Allows dynamically switching between different configurations.
- Communicates with a safety PLC through the safe Fieldbus connection (if available).
- Communicates and exchanges data through MODBUS protocol (if available).
- Performs a backup and a restore system configuration and password to/from microSD card (if available).

2.1.2.5 Control unit components

To learn about the components of each control unit model-type, see "Control units layout" on page 129.

For more information about the control unit LEDs:

- for status LED, see "Control unit status LEDs" on page 87.
- for Fieldbus LED: see "Control unit Fieldbus LEDs" on page 88.

2.1.3 Sensors

2.1.3.1 Sensor production lines

These are the sensors of each production line:

Production line	Sensor model-types	Main characteristics
Core line	S201A	4 detection fields Programmable horizontal angular coverage and detection distance Stationary, vehicle, and mobile application
Pro line	S201A-W S203A-W S203A-WT	4 detection fields Programmable horizontal angular coverage and detection distance Classic and corridor shapes Only -WT sensors, Teach-In function Stationary, vehicle, and mobile application
Omni line	S202A-MC2 S202A-MC4	Detection fields depending on model-type Programmable horizontal angular coverage, vertical angular coverage, and detection distance Classic, corridor, and cuboid shapes Stationary, vehicle, and mobile application Compatible only with eXtended Line control units
Plug&Safe	S202A-MS S202A-MV	One detection field Preset configuration Stationary application Compatible only with eXtended Line control units

NOTICE: *do not connect 9 meters range sensors to the control unit.*

For detailed information about the sensor production lines, see "Appendix A: sensor lines" on page 149.

2.1.3.2 Functions

The sensors perform the following functions:

- Detect motion in their field of view.
- Send the motion detection signal to the control unit through CAN bus.
- Signal to the control unit through CAN bus the failures or faults detected on the sensor during diagnostics.

2.1.3.3 2-axis bracket

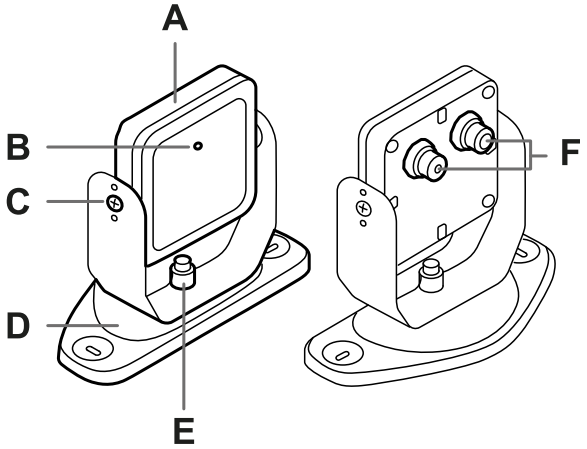

Part	Description
A	Sensor
B	Status LED
C	Tamper-proof screws to position the sensor at a specific angle around y-axis (tilt 10° steps)
D	Mounting bracket
E	Screw to position the sensor at a specific angle around z-axis (pan 10° steps)
F	Connectors for connecting the sensors in a chain and to the control unit

2.1.3.4 3-axis bracket

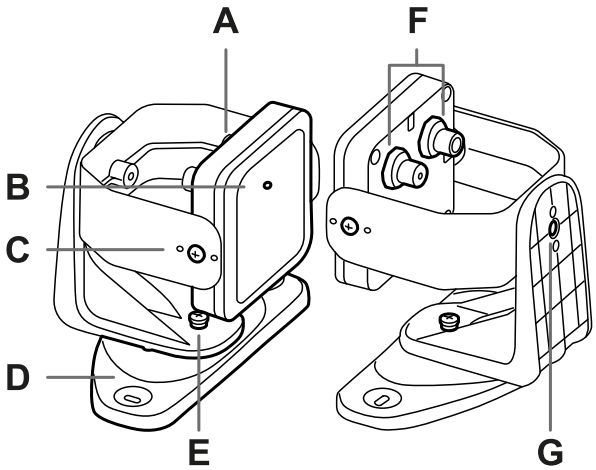

Part	Description
A	Sensor
B	Status LED, see "Sensor status LEDs" on page 91
C	Tamper-proof screws to position the sensor at a specific angle around y-axis (tilt 10° steps)
D	Mounting bracket
E	Tamper-proof screw to position the sensor at a specific angle around z-axis (pan 10° steps)
F	Connectors for connecting the sensors in a chain and to the control unit
G	Tamper-proof screw to position the sensor at a specific angle around x-axis (roll 10° steps)

2.1.4 Configuration tools

2.1.4.1 Introduction

To configure the system, two system applications are available:

- Inxpect Safety
- Inxpect Safety Studio

To know which configuration tool is available for each sensor, see "Appendix A: sensor lines" on page 149.

A system that includes at least one S202A sensor must be configured with Inxpect Safety Studio application.

If you configure a control unit with the Inxpect Safety application you can then continue the configuration with the Inxpect Safety Studio application. Conversely, if you use the Inxpect Safety Studio application, you cannot continue with the Inxpect Safety application.

2.1.4.2 Functions

The application permits the following main functions to be performed:

- Configure the system.
- Create the configuration report.
- Check and validate system functioning.
- Download system log.

2.1.4.3 Control unit compatibility

With Inxpect Safety

	Inxpect Safety version				
Control unit firmware version	**2.5.x**	**2.6.x**	**2.7.x**	**2.8.x**	**2.9.x**
1.5.0	OK	OK	NO	NO	NO
1.6.0	NO	OK	OK	OK	NO
2.0.0	NO	NO	OK	OK	OK
2.0.1	NO	NO	NO	NO	OK
2.1.0	NO	NO	NO	OK*	OK*
2.1.1	NO	NO	NO	NO	OK*

Note*: *if there is at least one S202A sensor in the system, please use the Inxpect Safety Studio application.*

With Inxpect Safety Studio

	Inxpect Safety Studio version
Control unit firmware version	**1.x.y**
2.1.0	OK
2.1.1	OK

2.1.4.4 Authentication

The application can be downloaded free of charge at https://tools.inxpect.com.

Different user levels are available. The Admin user is in charge of user management. All the passwords can be set through the application and then saved on the control unit.

2.1.4.5 User levels

These are the functions available for each user level:

	Observer	Expert	Engineer	Admin	Service*
Read system configuration	x	x	x	x	x
Validation	-	x	x	x	x
Download log files	-	x	x	x	x
Sensor setup (e.g., Node ID) and configuration	-	-	x	x	-
Apply changes	-	-	x	x	-

	Observer	Expert	Engineer	Admin	Service*
Digital I/O configuration	-	-	x	x	-
Backup configuration	-	x	x	x	-
Restore configuration	-	-	x	x	-
Network and Fieldbus settings and System labels	-	-	-	x	-
Control unit firmware upgrade	-	-	-	x	-
User management	-	-	-	x	-
SD Backup and SD Restore (if available)	-	-	-	x	-
Technical support and maintenance	-	-	-	-	x
Debug and statistical information	-	-	-	-	x

Note*: Service user can be enabled/disabled by the administrator. Since only Inxpect technicians are allowed to access as Service, the Service user is protected by an activation code.*

2.1.4.6 System configuration

The control unit parameters have their own default values that can be modified via the system application. For more information about the programmable parameters, see "Appendix A: sensor lines" on page 149.

When a new configuration is saved, the system generates the configuration report.

Note*: after a physical change of the system (e.g., new sensor installed), the system configuration must be updated and a new configuration report must be generated, too.*

2.2 Functioning principles

Contents

This section includes the following topics:

2.2.1 Sensor functioning principles **24**
2.2.2 Field of view **25**
2.2.3 Detection fields **25**

2.2.1 Sensor functioning principles

2.2.1.1 Introduction

The sensor is an FMCW (Frequency Modulated Continuous Wave) radar device based on a proprietary detection algorithm. It is also a multi-target sensor that sends pulses and receives information, analyzing the reflection of the nearest moving target that it encounters within each detection field.

The sensor can detect the current distance and the angle of each target.

Each sensor has its own fieldset. The fieldset corresponds to the structure of the field of view, which is composed of detection fields (see "Detection fields" on the next page).

2.2.1.2 Factors that influence the sensor field of view and object detection

WARNING! The presence of conductive material on the sensor could affect its field of view and, thus, object detection. For proper and safe system operation, validate the system under this condition.

2.2.1.3 Factors that influence the reflected signal

The signal reflected by the object depends on several characteristics of the same object:

- Metallic objects have a very high reflection coefficient, while paper and plastic reflect only a small portion of the signal
- The greater the surface exposed to the radar, the greater the reflected signal
- All other factors being equal, objects positioned directly in front of the radar generate a more significant signal than objects to the side
- Motion speed
- Inclination

All these factors have been analyzed for a human body during the safety validation of Inxpect SRE 200 Series and cannot lead to a dangerous situation. These factors may occasionally influence the behavior of the system, causing spurious activation of the safety function.

2.2.1.4 Detected and ignored objects

The signal analysis algorithm considers only those objects that move within the field of view, ignoring completely static objects (if the static object detection option is disabled).

Furthermore, the system can ignore small work waste products that fall within the first part of the sensor's field of view.

2.2.1.5 Interference with pacemakers or other medical devices

Radiation from Inxpect SRE 200 Series does not interfere with pacemakers or other medical devices.

2.2.2 Field of view

2.2.2.1 Types of field of view

The actual detection field of the sensor depends on the parameters set during configuration, as well as on the sensor installation height and inclination.

2.2.2.2 Areas of the field of view

The sensor field of view is composed of two areas:

- detection field: where the detection of objects similar to humans in any position is guaranteed
- gray area: where the actual detection of a moving object/person depends on the characteristics of the object itself (see "Factors that influence the reflected signal" above).

2.2.2.3 Dimensions and position

To learn the dimensions and position of the field of view for each sensor, see "Appendix A: sensor lines" on page 149.

2.2.3 Detection fields

2.2.3.1 Introduction

The field of view of each sensor can be composed of detection fields. Each detection field can have a dedicated detection signal.

WARNING! Configure the detection fields and associate them with the dual channel safety outputs according to the risk assessment requirements.

2.2.3.2 Detection fields dependency and detection signal generation

***Note**: the cuboid detection fields are independent, and the dependency mode cannot be set.*

If a sensor detects motion within a detection field, its detection signal changes status and, when configured, the related safety output is deactivated. The behavior of the outputs related to the following detection fields depends on the detection field dependency set:

If...	Then...
the detection field dependency is enabled and thus detection fields are dependent on each other	if a sensor detects motion within a detection field, all the outputs related to its following detection fields are deactivated too. Example Detection field configured: 1, 2, 3 Detection field with target detected: 2 Detection field in alarm status: 2, 3
the detection field dependency is disabled and thus detection fields are independent from each other	if a sensor detects motion within a detection field, only the output related to that detection field is deactivated. Example Detection field configured: 1, 2, 3 Detection field with target detected: 2 Detection field in alarm status: 2

WARNING! If detection fields are independent, an evaluation of the safety of the monitored area must be performed during the risk assessment. The blind area generated by a target can prevent the sensor from detecting targets in the following detection fields.

In this example, both detection field 1 and 2 generate a detection signal, for target **[A]** and **[B]** respectively.

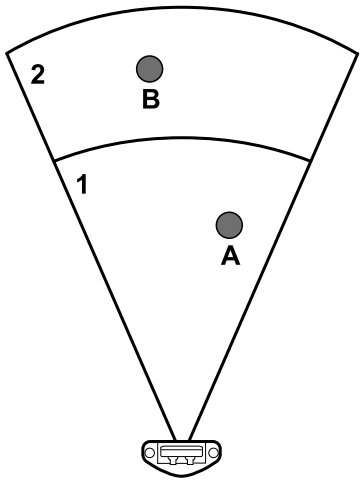

In this example, detection field 1 generates a detection signal for target **[A]** but target **[B]** could not be detected.

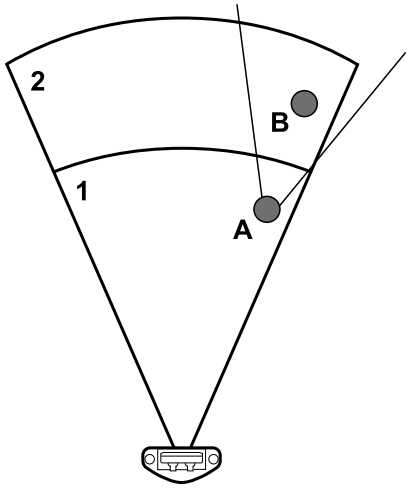

The detection field dependency can be set in the system application.

2.2.3.3 Independent detection fields: a use case

It can be useful to set the detection fields as independent, for example, if there is a scheduled temporary motion of an object in a detection field. An example can be a robotic arm moving from right to left within the detection field 1 only during a specific phase of the operative cycle.

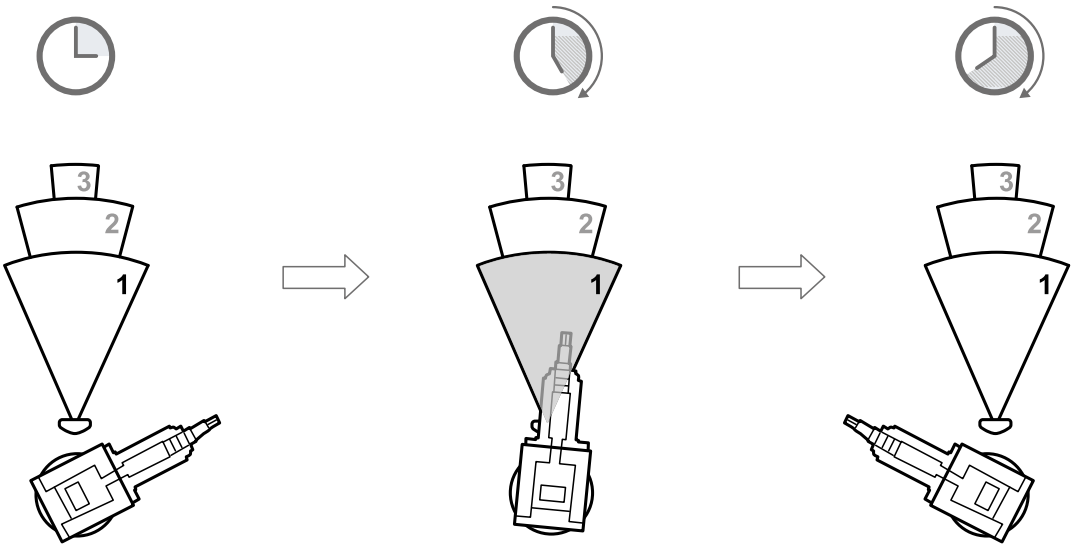

In this case, it is possible to ignore the detection signal in the detection field 1, thus avoiding unnecessary downtime.

WARNING! Evaluate the safety of the monitored area during risk assessment before deciding to ignore the detection signal of the detection field 1.

WARNING! The blind area generated by the moving robotic arm can prevent the sensor from detecting targets in the following other detection fields for a time interval. This time must be considered when defining the detection distance for detection field 2.

2.2.3.4 How to configure it in the system application

Parameter	Inxpect Safety	Inxpect Safety Studio
Detection field dependency	**Settings** > **Advanced**	**DESIGN** > sensor card > **OPTIONS**

2.3 Sensing safety functions

Contents

This section includes the following topics:

2.3.1 Safety working modes and safety functions **28**
2.3.2 Safety working mode: Access detection and restart prevention (default) **28**
2.3.3 Safety working mode: Always-on access detection **29**
2.3.4 Safety working mode: Always-on restart prevention **30**

2.3.1 Safety working modes and safety functions

2.3.1.1 Introduction

Each detection field of each sensor can perform the following safety working modes:

- **Access detection and restart prevention**
- **Always-on access detection**
- **Always-on restart prevention**

Each safety working mode is composed of one or both of the following safety functions:

Function	Description
Access detection	The machinery is reverted into a safe status when one or more persons enter the dangerous area.
Restart prevention	The machinery is prevented from restarting if people are in the dangerous area.

2.3.1.2 Safety working modes

You can select which safety working mode each sensor will employ for each of its detection fields via the system application:

- **Access detection and restart prevention** (default):
  - The sensor performs the access detection function when it is in the normal state (**No alarm** status).
  - The sensor performs the restart prevention function when it is in the alarm state (**Alarm** status).
- **Always-on access detection**:
  - The sensor always performs the access detection function (**No alarm** status + **Alarm** status).
- **Always-on restart prevention**:
  - The sensor always performs the restart function (**No alarm** status + **Alarm** status)

2.3.1.3 Access detection speed limits

The speed limits for movements detected by the access detection function depend on the sensor model-type. To learn the speed range for each sensor, see "Appendix A: sensor lines" on page 149.

2.3.2 Safety working mode: Access detection and restart prevention (default)

2.3.2.1 Introduction

This safety working mode is composed of the following safety functions:

- access detection
- restart prevention

2.3.2.2 Safety function: access detection

Access detection allows what follows:

When...	Then...
no motion is detected in the detection field	the system is in the normal state
motion is detected in the detection field (see "Access detection speed limits" on the previous page)	• the system is in the safe state • the restart prevention function is activated

2.3.2.3 Safety function: restart prevention

The restart prevention function remains active with the system in the safe state as long as motion is detected in the detection field, or, with the static object detection option enabled (see "Restart prevention function: static object detection option" on page 39), as long as a static object is detected in the detection field.

The sensor can detect micro-movements of just a few millimeters, such as breathing movements (with normal breathing) or the movements necessary for a person to remain in balance in an upright or squatting position.

The system sensitivity is higher than the sensitivity that characterizes the access detection function. For this reason, the system reaction to vibrating and moving parts is different.

The sensor guarantees the detection of people moving at any speed from 0 up to 1.6 m/s (5.25 ft/s)*, provided that the installation recommendations described in "Appendix A: sensor lines" on page 149 are fulfilled.

Note*: a stationary person still has static residual movements that the radar can detect.*

WARNING! When the restart prevention function is active the monitored area may be affected by the position and inclination of the sensors, as well as by their installation height and angular coverage (see "Applications" on page 50).

2.3.2.4 Restart timeout parameter

When the system no longer detects motion or, with the static object detection option enabled, no static object is detected, the system remains in a safe state for the time set in the **Restart timeout** parameter. The **Restart timeout** parameter's minimum value is 0.1 s. To manage different types of restarts with the additional safety function Restart signal, see "Restart signal" on page 31.

WARNING! If the Restart timeout is set to a value less than 4 s, the sensor is no longer able to detect breathing movement or the movements necessary for a person to remain in balance in an upright or a squatting position. Set a value less than 4 s only for areas where people have no access.

2.3.2.5 How to configure it in the system application

Parameter	Inxpect Safety	Inxpect Safety Studio
Safety working mode	**Configuration**	**DESIGN** > sensor card > **DETECTION FIELDS**
Restart timeout	**Configuration**	**DESIGN** > sensor card > **DETECTION FIELDS** (with **Safety working mode** set as **Access detection and restart prevention**)

2.3.3 Safety working mode: Always-on access detection

2.3.3.1 Safety function: access detection

This is the only safety function available for the **Always-on access detection**.

Access detection allows what follows:

When...	Then...
no motion is detected in the detection field	the system is in the normal state
motion is detected in the detection field	• the access detection function remains active • the system is in the safe state • the sensitivity remains as it was before the motion detection

WARNING! If the Always-on access detection is selected, additional safety measures must be introduced to ensure the restart prevention function.

2.3.3.2 T_{OFF} parameter

When the system no longer detects motion, it remains in a safe state for the time set in the **T_{OFF}** parameter.

The T_{OFF} value can be set from 0.1 s to 60 s.

2.3.3.3 How to configure it in the system application

Parameter	Inxpect Safety	Inxpect Safety Studio
Safety working mode	**Configuration**	**DESIGN** > sensor card > **DETECTION FIELDS**
T_{OFF}	**Configuration**	**DESIGN** > sensor card > **DETECTION FIELDS** (with **Safety working mode** set as Always-on access detection)

2.3.4 Safety working mode: Always-on restart prevention

2.3.4.1 Safety function: restart prevention

This is the only safety function available for the **Always-on restart prevention**.

The restart prevention allows what follows:

When...	Then...
no motion is detected in the detection field	the system is in the normal state
motion is detected in the detection field	• the system is in the safe state • the restart prevention function remains active • the angular coverage and sensitivity remain as they were before motion detection

The sensor can detect micro-movements of just a few millimeters, such as breathing movements (with normal breathing) or the movements necessary for a person to remain in balance in an upright or squatting position.

The system sensitivity is higher than the sensitivity that characterizes the access detection function. For this reason, the system reaction to vibrating and moving parts is different.

The sensor guarantees the detection of people moving at any speed from 0 up to 1.6 m/s (5.25 ft/s)*, provided that the installation recommendations described in "Appendix A: sensor lines" on page 149 are fulfilled.

Note*: a stationary person still has static residual movements that the radar can detect.*

WARNING! When the restart prevention function is active the monitored area may be affected by the position and inclination of the sensors, as well as by their installation height and angular coverage (see "Applications" on page 50).

2.3.4.2 Restart timeout parameter

When the system no longer detects motion or, with the static object detection option enabled, no static object is detected, the system remains in a safe state for the time set in the **Restart timeout** parameter. The **Restart timeout** parameter's minimum value is 0.1 s. To manage different types of restarts with the additional safety function Restart signal, see "Restart signal" on the next page.

WARNING! If the Restart timeout is set to a value less than 4 s, the sensor is no longer able to detect breathing movement or the movements necessary for a person to remain in balance in an upright or a squatting position. Set a value less than 4 s only for areas where people have no access.

2.3.4.3 How to configure it in the system application

Parameter	Inxpect Safety	Inxpect Safety Studio
Safety working mode	**Configuration**	**DESIGN** > sensor card > **DETECTION FIELDS**
Restart timeout	**Configuration**	**DESIGN** > sensor card > **DETECTION FIELDS** (with **Safety working mode** set as **Always-on restart prevention**)

2.4 Additional safety functions

Contents

This section includes the following topics:

2.4.1 Stop signal **31**
2.4.2 Restart signal **31**
2.4.3 Muting **34**
2.4.4 Dynamic system configuration **36**
2.4.5 Fieldbus controlled **38**

2.4.1 Stop signal

2.4.1.1 Function description

The stop signal is an additional safety function that immediately halts system operation. It is activated by the operator via a physical push button or another safety mechanism connected to a safety input on the control unit. Upon activation, the system transitions to a safe state, regardless of the detection status of the sensors.

The function can be activated through a digital input or safety Fieldbus.

WARNING! Any fault on the sensors or the control unit brings the system to the safe state and makes the function unavailable.

2.4.1.2 Activation

Digital input

The digital input must be set as **Stop signal**.

The function can be performed only as dual channel inputs (Category 3, according to EN ISO 13849-1).

For details about the digital input signal, see "Digital input signals" on page 116.

Fieldbus

For details about the communication protocol, see the Fieldbus protocol reference guide.

2.4.1.3 Debounce filter (only eXtended Line)

The debounce filter allows to filter test pulses in a digital input configured as **Stop signal**. Its enabling is recommended when an ESPE device equipped with OSSD is connected to the digital input.

NOTICE: *debounce filter shall only be enabled with ESPE devices that initiate and internally monitor the OSSD test.*

Per default, the filter is disabled. It can be enabled via the system application.

2.4.1.4 How to configure it in the system application

Parameter	Inxpect Safety	Inxpect Safety Studio
Digital input function	**Settings** > **Digital Input-Output**	**DESIGN** > control unit card > **DIGITAL INPUTS**
Debounce filter enabling/disabling	**Settings** > **Advanced** > **Stop signal debounce filter**	**DESIGN** > control unit card > **DIGITAL INPUTS**

2.4.2 Restart signal

2.4.2.1 Function description

The restart signal function is an additional safety function that enables the transition from the safe to the normal state and, when no motion is detected, switches the safety outputs for all detection fields to the ON-state.

The function can be activated through a digital input or safety Fieldbus.

The restart signal feedback is activated when it is possible to manually restart at least one detection field.

The signal feedback can be communicated via a digital output or safety Fieldbus.

WARNING! Any fault on the sensors or the control unit brings the system to the safe state and makes the function unavailable.

2.4.2.2 Activation

Digital input

The digital input must be set as **Restart signal**.

The function can be performed as:

- Single channel inputs/OSSDs (Category 2, according to EN ISO 13849-1)
- Dual channel inputs/OSSDs (Category 3, according to EN ISO 13849-1)

For details about the digital input signal, see "Digital input signals" on page 116.

Fieldbus

For details about the communication protocol, see the Fieldbus protocol reference guide.

2.4.2.3 Types of managed restart

NOTICE: *it is the responsibility of the machinery manufacturer to assess if an automatic restart can guarantee the same level of safety as a manual restart (as defined in standard EN ISO 13849-1, section 5.2.2).*

The system manages the following types of restart for each detection field independently:

Type	Conditions for enabling machinery restart	Safety working mode allowed
Automatic (default)	The time interval set via the system application (**Restart timeout**) has passed since the last motion detection*.	All
Manual	The **Restart signal** was received correctly** (see "Restart signal (dual channel, redundancy mode coherent)" on page 123).	**Always-on access detection**
Safe manual	• The time interval set via the system application (**Restart timeout**) has passed since the last motion detection* and • The **Restart signal** was received correctly** (see "Restart signal + System recondition (dual channel, redundancy mode coherent)" on page 126).	**Access detection and restart prevention, Always-on restart prevention**

WARNING! If the Automatic restart is set with the Safety working mode Always-on access detection, the restart prevention safety function is not performed, and consequently, the system does not guarantee the detection of a person within the monitored area.

Note*: *machinery restart is enabled if no motion is detected up to 35 cm (13.8 in) beyond the detection field.*

Note**: *(for all types of restart) other dangerous system statuses may prevent the restart of the machinery (e.g., diagnostic fault, sensor masking, etc.)*

2.4.2.4 Configure the restart signal function

Type	Procedure
Automatic	1. For the involved detection fields, set the **Restart function** as **Automatic**. 2. For each detection field in use with automatic restart, select the desired **Safety working mode** and set the **Restart timeout** parameter (or the $\mathbf{T_{OFF}}$ parameter, if present).
Manual	1. Connect the machinery button for the restart signal as convenient (see "Electrical connections" on page 141). 2. To activate the function through digital input, set a digital input as **Restart signal**. 3. To activate the function via Fieldbus, make sure that no digital input is configured as **Restart signal**. For details about the communication protocol, see the Fieldbus protocol reference guide. **WARNING! From the control unit firmware version 2.0.0, if the Restart signal function has been enabled both through the safety Fieldbus and the digital inputs, the functionality can be activated from both of them.** 4. For the involved detection fields, set the **Restart function** as **Manual**. 5. For each detection field in use with manual restart, set the $\mathbf{T_{OFF}}$ parameter value. ***Note**: the **Safety working mode** is automatically set to **Always-on access detection** for all the detection fields in use with manual restart.*
Safe manual	1. Connect the machinery button for the restart signal as convenient (see "Electrical connections" on page 141). 2. To activate the function through digital input, set a digital input as **Restart signal**. 3. To activate the function via Fieldbus, make sure that no digital input is configured as **Restart signal**. For details about the communication protocol, see the Fieldbus protocol reference guide. **WARNING! From the control unit firmware version 2.0.0, if the Restart signal function has been enabled both through the safety Fieldbus and the digital inputs, the functionality can be activated from both of them.** 4. For the involved detection fields, set the **Restart function** as **Safe manual**. 5. For each detection field in use with manual restart, select the **Safety working mode** among those allowed and set the **Restart timeout** parameter value.

2.4.2.5 Restart feedback signal option settings

If at least one detection field in use is configured as **Manual** or **Safe manual** restart, the behavior of the **Restart feedback signal** depends on the option selected:

Option	Restart feedback signal behavior
Standard	• The selected output is activated (ON-state) if there is no more motion within at least one detection field configured as **Manual** or **Safe manual** restart. The ON-state lasts as long as there is no motion within one or more detection fields (configured as **Manual** or **Safe manual** restart) and until the restart signal is activated on the selected input. • The selected output remains in the OFF-state if: ◦ none of the detection fields (configured as **Manual** or **Safe manual** restart) are ready to be restarted, and as long as motion (or a fault) is detected within at least one detection field (configured as **Manual** or **Safe manual** restart), or ◦ as long as no motion is detected within any detection fields configured as **Manual** or **Safe manual** restart, but none can be restarted yet.
Pulsed	• The selected output is activated (ON-state) if there is no more motion within at least one detection field configured as **Manual** or **Safe manual** restart. The ON-state lasts as long as there is no motion within one or more detection fields (configured as **Manual** or **Safe manual** restart) and until the restart signal is activated on the selected input. • The selected output switches continuously between the ON-state and OFF-state if none of the detection fields (configured as **Manual** or **Safe manual** restart) are ready to be restarted, and as long as motion (or a fault) is detected within at least one detection field (configured as **Manual** or **Safe manual** restart) • The selected output remains in the OFF-state as long as no motion is detected within any detection fields configured as **Manual** or **Safe manual** restart, but none can be restarted yet.

2.4.2.6 Feedback

Digital output

The digital output must be set as **Restart feedback signal**.

It can be set as **Standard** or **Pulsed**, see "Restart feedback signal option settings" on the previous page.

It switches the selected output to the ON-state when it is possible to manually restart at least one detection field:

- If all the used detection fields are configured as **Automatic** restart, the selected output is always in OFF-state.
- If at least one detection field in use is configured as **Manual** or **Safe manual** restart, the behavior depends on the option selected (see "Restart feedback signal option settings" on the previous page.

Fieldbus

For details about the communication protocol, see the Fieldbus protocol reference guide.

2.4.2.7 How to configure it in the system application

Parameter	Inxpect Safety	Inxpect Safety Studio
Restart type	**Settings** > **Restart function**	**DESIGN** > control unit card > **RESTART FUNCTION**
Restart feedback signal options	**Settings** > **Restart function**	**DESIGN** > control unit card > **DIGITAL OUTPUTS** (with an output configured as **Restart feedback signal**)
Digital input function	**Settings** > **Digital Input-Output**	**DESIGN** > control unit card > **DIGITAL INPUTS**
Digital output function	**Settings** > **Digital Input-Output**	**DESIGN** > control unit card > **DIGITAL OUTPUTS**

2.4.3 Muting

2.4.3.1 Function description

The muting function is an additional safety function that inhibits the sensing capability of the sensor on which it is activated. It can be activated for a specific sensor or for a group of sensors. This results in the system keeping the normal state even when the muted sensors detect motion.

When the muting function is activated, it is effective on one or more sensors only when the conditions permit (see "Muting conditions" on the next page).

The muting function can be activated for all the sensors simultaneously or only for a group of sensors. Up to two groups can be configured.

The function can be activated through a digital input or safety Fieldbus.

WARNING! Any fault on the sensors or the control unit brings the system to the safe state and makes the function unavailable.

WARNING! When the sensor is in muting, no sensor error is available (see" ERROR events (sensor)" on page 104).

The muting enable feedback signal is activated if at least one sensor group is in muting.

The signal feedback can be communicated via a digital output or safety Fieldbus.

NOTICE: *it is the responsibility of the machinery manufacturer to assess whether the indication of the muting status is necessary (as defined in section 5.2.5 of EN ISO 13849-1 standard).*

2.4.3.2 Activation

Digital input

The digital input must be set as **Muting group 1** or **Muting group 2**, depending on the configured muting groups.

The function can be performed as dual channel inputs (Category 3, according to EN ISO 13849-1).

For details about the digital input signal, see "Digital input signals" on page 116.

Fieldbus

WARNING! If the muting function has been enabled via the safety Fieldbus and the digital inputs, only the enabling of the digital inputs is considered for the function.

The muting function can be enabled for each sensor individually.

For details about the communication protocol, see the Fieldbus protocol reference guide.

2.4.3.3 Function settings

The following must be defined via the system application:

- for each input, the group of managed sensors
- for each group, the sensors that belong to it
- for each sensor, whether it belongs to a group or not

***Note**: if the muting function is enabled for one sensor, it is enabled for all the detection fields of the sensor, regardless if the detection fields are dependent or independent and the anti-tampering functions are disabled for that sensor.*

2.4.3.4 Muting conditions

The muting function is active on a specific sensor only under the following conditions:

- All the detection fields involved have no active detection signal, no active static object detection signal, and the restart timeout has expired for all of them.
- There is no tampering signal or fault signal for that sensor.

When muting is activated for a group of sensors, the function becomes active as soon as there is no detection from any sensor in the monitored area.

WARNING! Activate the muting signal on sensors monitoring the same dangerous area once the whole area is safe and nobody can access it. If muting is activated on individual sensors via the Fieldbus and sensors monitoring the same dangerous area continue to detect movement, a person could move into a space monitored by a muted sensor, compromising the safety of the entire area.

2.4.3.5 Enable muting signal characteristics

The muting function is enabled only if both logic signals of the dedicated input meet certain characteristics.

Below is a graphic representation of the signal characteristics.

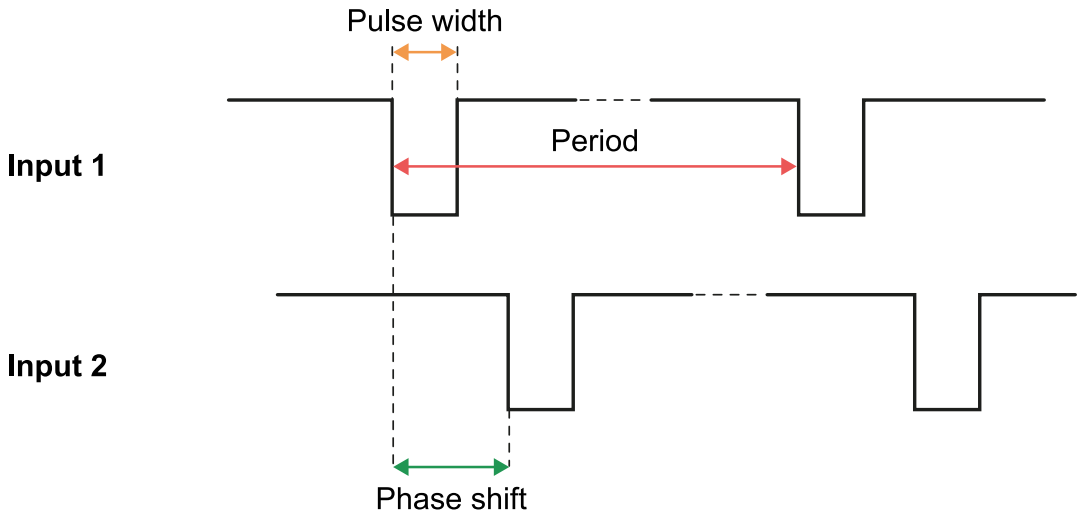

In the system application, it is necessary to set the parameters that define the signal characteristics.

***Note**: with pulse duration = 0, it is sufficient that the input signals are at high logic level (1) to enable muting.*

2.4.3.6 Feedback

Digital output

The digital output must be set as **Muting enable feedback signal**.

Fieldbus

For details about the communication protocol, see the Fieldbus protocol reference guide.

2.4.3.7 How to configure it in the system application

Parameter	Inxpect Safety	Inxpect Safety Studio
Muting signal pulse width, pulse period, and phase shift	**Settings** > **Muting**	**DESIGN** > control unit card > **MUTING OPTIONS** > **MUTING PARAMETERS**
Muting groups	**Settings** > **Muting**	**DESIGN** > control unit card > **MUTING OPTIONS** > **MANAGE MUTING GROUPS**
Digital input function	**Settings** > **Digital Input-Output**	**DESIGN** > control unit card > **DIGITAL INPUTS**
Digital output function	**Settings** > **Digital Input-Output**	**DESIGN** > control unit card > **DIGITAL OUTPUTS**

2.4.4 Dynamic system configuration

2.4.4.1 Function description

Inxpect SRE 200 Series allows a real-time adjustment of the most important system parameters, providing the means to switch dynamically among different preset configurations. Via the system application, once the first system configuration (default configuration) has been set, it is possible to set alternative presets to enable dynamic real-time reconfiguration of the monitored area.

The dynamic system configuration function is an additional safety function that allows the control unit to select a specific dynamic configuration.

The function can be activated through a digital input or safety Fieldbus.

WARNING! Any fault on the sensors or the control unit brings the system to the safe state and makes the function unavailable.

***Note**: only for S202A sensors, if the application type is set as **Stationary** and the next configuration has at least one detection field with safety working mode set as **Access detection and restart prevention** or **Always-on restart prevention**, the configuration change leads to an alarm on that (those) detection field(s) for at least as long as the time set in the **Restart timeout** parameter.*

2.4.4.2 Dynamic configuration presets

The number of presets available depends on the sensor model-type, see "Appendix A: sensor lines" on page 149.

In a mixed system with at least one S202A sensor, the maximum number of dynamic configurations is limited to 16. If the dynamic configurations are managed by digital input, the maximum presets are limited to 8.

2.4.4.3 Activation

Digital input

The digital input must be set as **Dynamic configuration switch**.

The function can be performed as dual channel inputs/OSSDs (Category 3, according to EN ISO 13849-1).

To activate one of the preset configurations dynamically, one or both the digital inputs of the control unit can be used. The result is the following:

If...	Then it is possible to switch dynamically between...
only **one** digital input is configured as **Dynamic configuration switch**	**two** preset configurations (see "Case 1" on the next page and "Case 2" on the next page)
both digital inputs are configured as **Dynamic configuration switch** and the encoded channel option is disabled	**four** preset configurations (see "Case 3" on the next page)
both digital inputs are configured as **Dynamic configuration switch** and the encoded channel option is enabled	**eight** preset configurations (see "Case 4" on the next page)

***Note**: the configuration change is safe because two-channel inputs are used.*

***Note**: if the encoded channel option is enabled, any invalid combination that lasts more than 33 ms results in a fault on the inputs that brings the system to a safe state.*

Case 1

The first digital input has been configured as **Dynamic configuration switch**.

Dynamic configuration number	Input 1 (CH1 and CH2)	Input 2
#1	**0**	-
#2	**1**	-

0 = signal deactivated; 1 = signal activated

Case 2

The second digital input has been configured as **Dynamic configuration switch**.

Dynamic configuration number	Input 1	Input 2 (CH1 and CH2)
#1	-	**0**
#2	-	**1**

0 = signal deactivated; 1 = signal activated

Case 3

Both digital inputs have been configured as **Dynamic configuration switch**, and the encoded channel option is disabled.

Dynamic configuration number	Input 1 (CH1 and CH2)	Input 2 (CH1 and CH2)
#1	**0**	**0**
#2	**1**	**0**
#3	**0**	**1**
#4	**1**	**1**

0 = signal deactivated; 1 = signal activated

Case 4

Both digital inputs have been configured as **Dynamic configuration switch**, and the encoded channel option is enabled.

The valid combinations are only those that differ at least by two values, and they are listed below:

Dynamic configuration number	Input 1		Input 2	
	CH1	CH2	CH1	CH2
#1	**1**	**0**	**0**	**0**
#2	**0**	**1**	**0**	**0**
#3	**0**	**0**	**1**	**0**
#4	**0**	**0**	**0**	**1**
#5	**1**	**1**	**1**	**0**
#6	**1**	**1**	**0**	**1**
#7	**1**	**0**	**1**	**1**
#8	**0**	**1**	**1**	**1**

0 = signal deactivated; 1 = signal activated

For details about the digital input signal, see "Digital input signals" on page 116.

Fieldbus

WARNING! If one or more digital inputs are configured as "Dynamic configuration switch", a switch through the safety Fieldbus is not considered.

WARNING! Before activating one of the preset configurations via the safety Fieldbus, ensure that none of the digital inputs is configured as Dynamic configuration switch; otherwise, the Inxpect SRE 200 Series ignores all the switches made via the safety Fieldbus.

For details about the communication protocol, see the Fieldbus protocol reference guide.

2.4.4.4 Dynamic system configuration parameters

All sensor parameters related to the detection fields can be set in the dynamic configuration, see "Appendix A: sensor lines" on page 149.

All the remaining system parameters cannot be changed dynamically and are considered static.

2.4.4.5 Safe configuration change

The change of the configuration takes place safely both on stationary and moving machinery. The sensor always monitors the entire monitored area and when it receives a request to change to a configuration with a longer detection field, it immediately reverts to safe state if people are present in such a field.

2.4.4.6 How to configure it in the system application

Parameter	Inxpect Safety	Inxpect Safety Studio
Sensor and detection field parameters	**Configuration**	**DESIGN** > sensor card > **DETECTION FIELDS**
Dynamic configuration management	**Configuration**	**DESIGN** > (in control unit card) ⚙
Digital input function	**Settings** > **Digital Input-Output**	**DESIGN** > control unit card > **DIGITAL INPUTS**

2.4.5 Fieldbus controlled

2.4.5.1 Function description

Fieldbus controlled is an additional safety function that can be performed both as input and output:

- input: it monitors the input status via Fieldbus communication.
- output: it allows the specific output to be set via the Fieldbus communication.

It is available only if Fieldbus communication is available in the control unit, and it can be activated only via a digital input/output.

WARNING! the following faults makes the Fieldbus controlled additional safety function unavailable: POWER ERROR, TEMPERATURE ERROR, FIELDBUS ERROR, PERIPHERAL ERROR, FEE ERROR and FLASH ERROR.

2.4.5.2 Activation

Digital input

The digital input must be set as **Fieldbus controlled**.

The function can be performed as:

- Single channel inputs/OSSDs (Category 2, according to EN ISO 13849-1)
- Dual channel inputs/OSSDs (Category 3, according to EN ISO 13849-1)

Digital output

The digital output must be set as **Fieldbus controlled**.

2.4.5.3 How to configure it in the system application

Parameter	Inxpect Safety	Inxpect Safety Studio
Digital input function	**Settings** > **Digital Input-Output**	**DESIGN** > control unit card > **DIGITAL INPUTS**
Digital output function	**Settings** > **Digital Input-Output**	**DESIGN** > control unit card > **DIGITAL OUTPUTS**

2.5 Other functions

Contents

This section includes the following topics:

2.5.1 Restart prevention function: static object detection option **39**
2.5.2 Teach-In function **40**
2.5.3 Anti-tampering functions: anti-rotation around axes **45**
2.5.4 Anti-tampering functions: anti-masking **46**
2.5.5 System recondition **48**
2.5.6 Electromagnetic robustness **49**
2.5.7 Surface moisture robustness **49**

2.5.1 Restart prevention function: static object detection option

2.5.1.1 Introduction

The static object detection option allows the restart prevention function also to detect static objects in the dangerous area.

NOTICE: *the ability to detect an object depends on the RCS of the object. The static object detection option does not guarantee 100% detection of static objects.*

2.5.1.2 Availability

The static object detection option is available for:

- control unit firmware version 1.5.0 or later, and
- sensor firmware version 3.0 or later.

2.5.1.3 Possible applications

This option can be useful if the sensor is installed on moving elements (see "Mobile application" on page 51) or to prevent the restart of a robot that could bump into a static object in the area temporarily.

2.5.1.4 Operation

The option can be enabled for each detection field of each sensor with the safety working mode set to **Access detection and restart prevention**. Enable the option only if the detection field is free of static objects; otherwise, the system would never reactivate the detection signals after a motion is detected in the area.

2.5.1.5 Settings

Via the system application, it is possible to increase or decrease the sensitivity of the static object detection of the sensors.

2.5.1.6 Feedback

The static object detection feedback signal is activated when at least one sensor detects a static object in one of its detection fields. The feedback signal can be performed via digital output or Fieldbus (if available)

Digital output

The digital output must be set as **Static object detection feedback signal**.

It switches the selected output to the ON-state when at least one sensor detects a static object in one of its detection fields. The selected output remains in ON-state for at least 100 ms. If, at the same time, a moving target is detected in the detection field, the **Static object detection feedback signal** will switch its selected output to OFF-state for the duration of the movement.

Fieldbus

For details about the communication protocol, see the Fieldbus protocol reference guide.

2.5.1.7 How to configure it in the system application

Parameter	Inxpect Safety	Inxpect Safety Studio
Static object detection option enabling	**Configuration**	**DESIGN** > sensor card > **DETECTION FIELDS**
Static object detection option sensitivity	**Settings** > **Advanced**	**DESIGN** > control unit card > **OTHER OPTIONS**

2.5.2 Teach-In function

2.5.2.1 Availability

The Teach-In function is available for:

- S203A-WT sensors (firmware version 5.0 or later), and
- control unit firmware version 2.1.0 or later

2.5.2.2 Introduction

For all the connected -WT sensors, the Teach-In function searches for moving or static objects (learning phase) within the Teach-In learning area (configurable area). The function automatically adjusts the detection distance of the last detection field of each sensor according to the position of the nearest target and an offset distance set.

The function affects each sensor's last configured detection field (with detection distance > 0) as set in the first dynamic configuration. The function affects the first dynamic configuration regardless of how many dynamic configurations there are and which one is active.

The function can be activated through a digital input or safety Fieldbus.

WARNING! The Teach-In function is a non-safe function that changes the configuration of the detection fields and thus the area's safety. Validate the configuration set by the function (see relevant step in the procedure "Execute the Teach-In function" on page 44).

2.5.2.3 Activation

Digital input

The digital input must be set as **Teach-In**.

Fieldbus

For details about the communication protocol, see the Fieldbus protocol reference guide.

2.5.2.4 Feedback

Digital output

The digital output must be set as **Teach-In feedback signal**.

It switches the selected output to the following states:

- ON-state when the Teach-In function is activated
- slow flashing-state (500 ms ON-state followed by 1500 ms OFF-state) when the Teach-In function has completed the automatic configuration
- fast flashing-state (500 ms ON-state followed by 500 ms OFF-state) in case of a fault condition given by the Teach-in function
- OFF-state when the operator has validated the new configuration

Fieldbus

For details about the communication protocol, see the Fieldbus protocol reference guide.

2.5.2.5 Learning area

The default Teach-In learning area is as follows:

- horizontal angular coverage: 40°
- detection distance: from 300 mm (0.98 ft) to 5000 mm (16.4 ft).

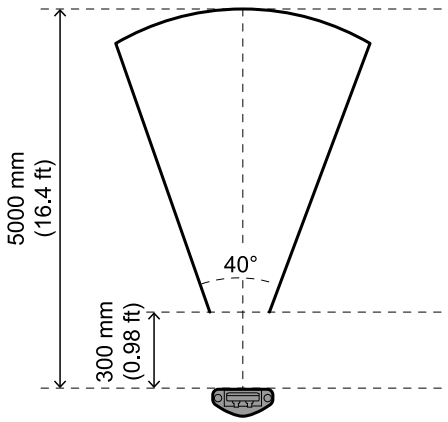

The learning area can be customized: horizontal angular coverage (**β** parameter), corridor width (**c** parameter) and maximum distance (**Dmax**), see "Teach-In function parameter list" on page 133.

***Note**: the Teach-In learning area is different from the field of view of each sensor (set in **Configuration**).*

2.5.2.6 Operation

If during the learning phase, the function finds at least one target inside the learning area, it adjusts the detection distance of the last detection field [$\mathbf{D_{DF}}$] according to the target distance **[R]** and the offset distance **[o]** set (default 200 mm (0.65 ft)).

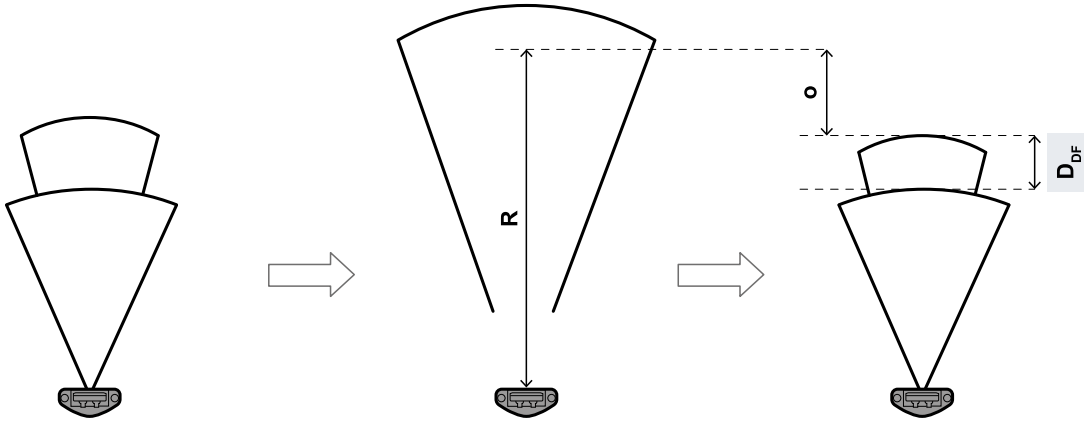

If no target is found, the detection distance of the last detection field **[$\mathbf{D_{DF}}$]** of each -WT sensor is set up such as the total detection distance of the sensor **[$\mathbf{D_{TOT}}$]** is the maximum detection distance set.

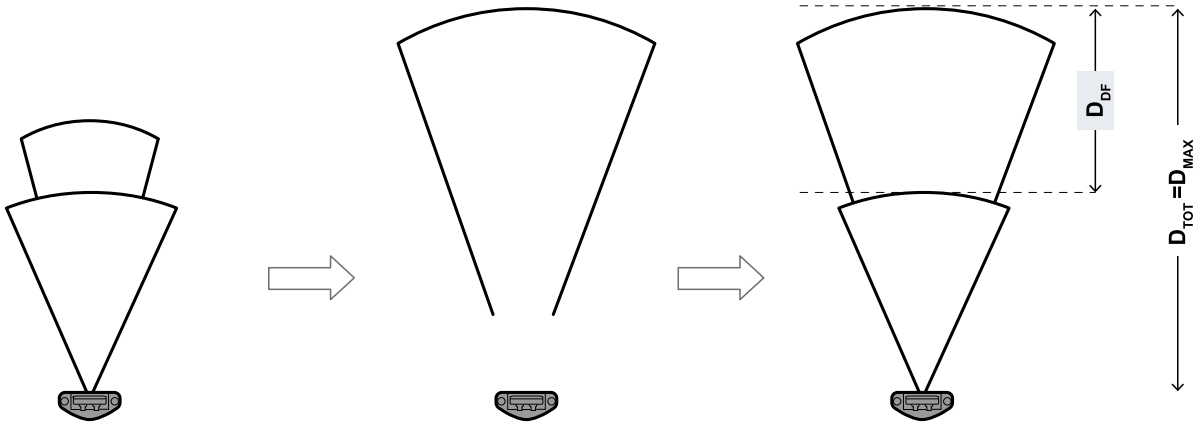

The function does not modify any configuration parameters except for the detection distance of the last detection field, which can be either reduced or increased according to the target distance.

Manual validation of the new configuration is required to confirm the distance set by the function.

2.5.2.7 Detection distance calculation

Legend

R = target distance

o = offset distance (**o** parameter, default 200 mm)

b = beginning of the last detection field; if there is only one detection field, it is 0.

d = minimum detection distance of the detection field = 200 mm

$\mathbf{D_{DF}}$ = detection distance of the detection field set by the function

$\mathbf{D_{TOT}}$ = total detection distance of the sensor ($\mathbf{D_{DF}}$ **+ b**)

$\mathbf{D_{MAX}}$ = maximum detection distance of the sensor (**Dmax** parameter, default 5000 mm)

Case 1 (target detected)

If **R - o** > **b + d**

Result: $\mathbf{D_{DF}}$ = **R - o - b**

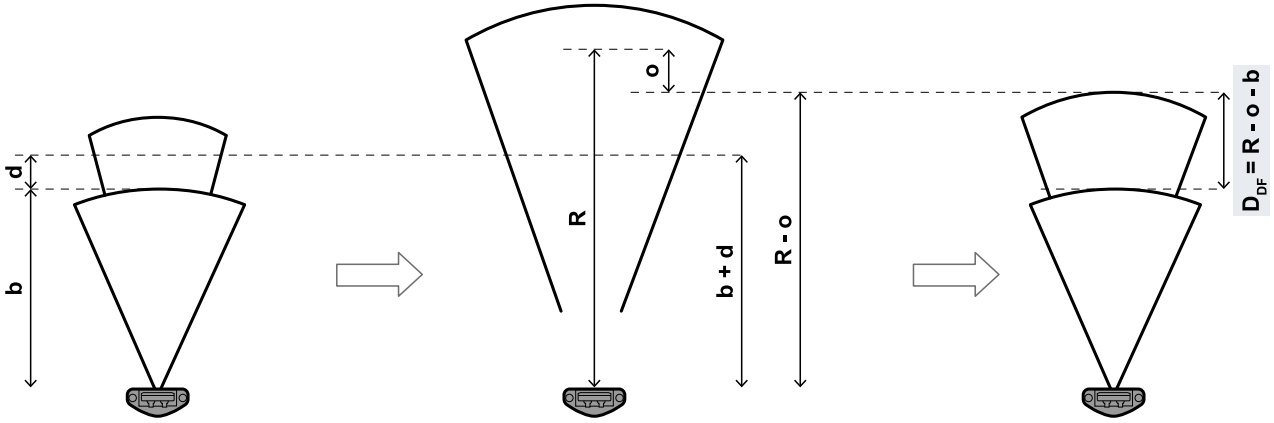

Case 2 (target detected)

If **R - o** < **b + d**

Result: $\mathbf{D_{DF}}$ = **d**

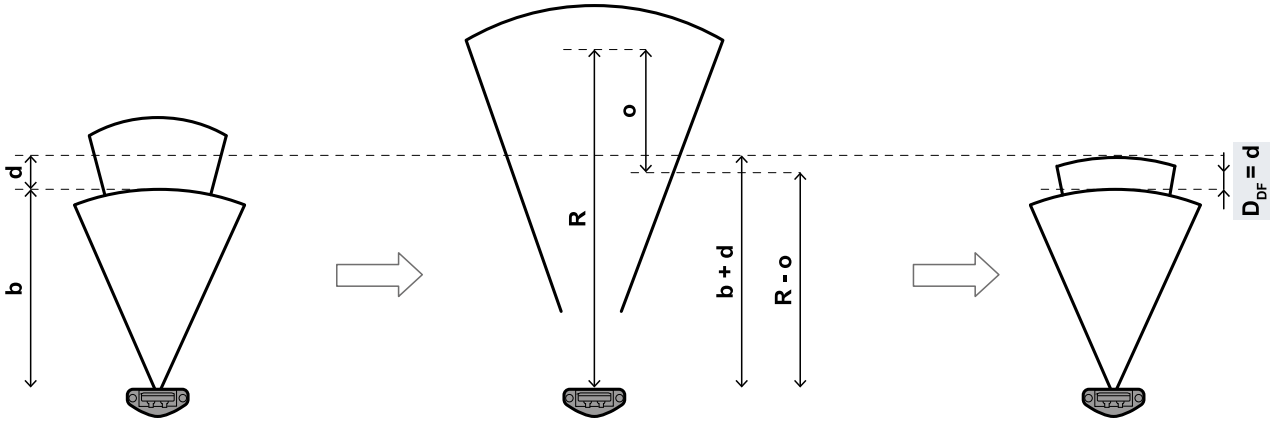

WARNING! To avoid misconfiguring the detection fields, set the start of the last detection field with a correct margin towards the target you expect to detect. See "Calculation examples" on the next page.

Case 3 (target not detected)

Result: $\mathbf{D_{DF}} = \mathbf{D_{MAX}} - \mathbf{b}$.

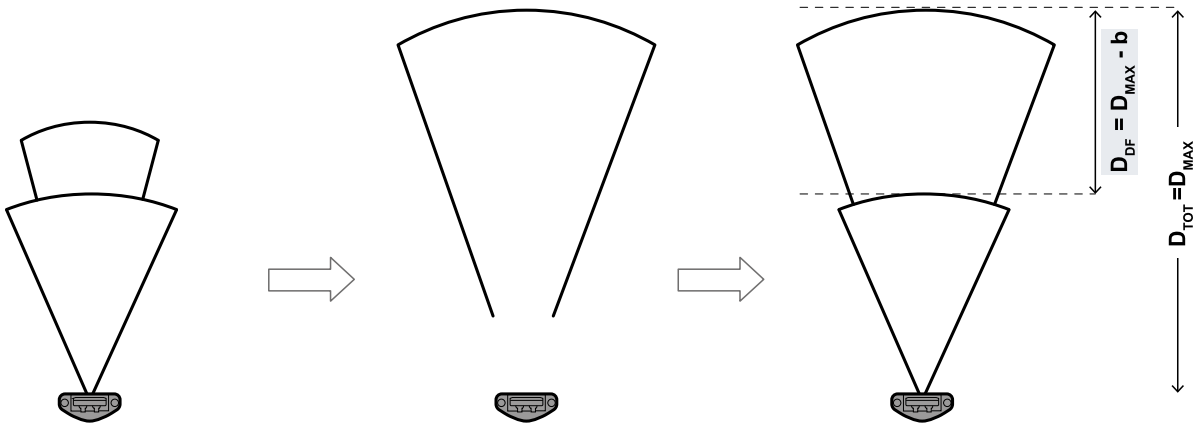

Case 4 (target detected)

If **R** < **b**

Result: $\mathbf{D_{DF}}$ = not calculated, function fault

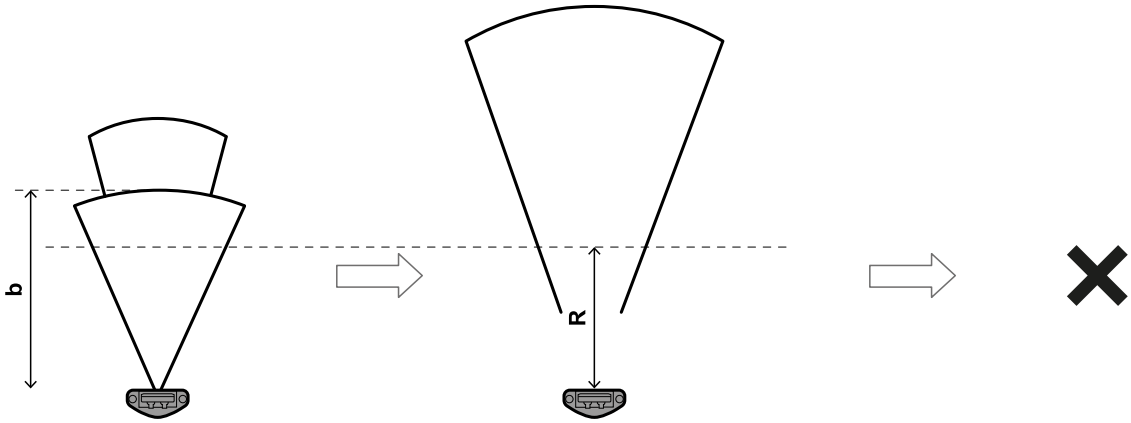

2.5.2.8 Calculation examples

- Example 1: case 1
  R: 1900 mm
  o: 150 mm
  d: 200 mm
  b: 1500 mm
  R - o = 1750
  b + d = 1700
  R- o > **b + d**
  Then $\mathbf{D_{DF}} = \mathbf{R - o - b}$ = 1900 - 150 - 1500 = 250 mm
  $\mathbf{D_{TOT}} = \mathbf{D_{DF}} + \mathbf{b}$ = 1750 mm

  Example 2: field of view of the sensor pre-configured in a non-optimal way by the user
  R: 1600 mm
  o: 150 mm
  d: 200 mm
  b: 1500 mm
  R - o = 1450 mm
  b + d = 1750

R - o < **b + d**

Then $\mathbf{D_{DF}}$ = **d** = 200 mm

$\mathbf{D_{TOT}}$ = $\mathbf{D_{DF}}$ **+ b** = 1700 mm

The total detection distance of the sensor ($\mathbf{D_{TOT}}$) is greater than the target distance (**R**). If the sensor generates false alarms, adjust the beginning of the last detection field (**b**) properly.

2.5.2.9 Execute the Teach-In function

1. Check that the field of view configuration of the sensor is compatible with the Teach-In function using the system application. See "Example 2: field of view of the sensor pre-configured in a non-optimal way by the user" on the previous page and See "Configure Inxpect SRE 200 Series" on page 74.
2. Activate the Teach-In function through a digital input or safety Fieldbus. During the learning time, the actions below are performed:
   - the detection signals outputs switch to OFF-state.
   - the **Teach-In feedback signal** output switches to ON-state.
   - the learning phase begins.
   - for each -WT sensor, the detection distance of the last detection field is adjusted according to the position of the nearest target detected, if any, and an APPLY CHANGES operation is performed to save the new configuration on the control unit.

   ***Note**: to activate the Teach-In function through digital input, a digital input must be set as **Teach-In**.*

   ***Note**: the learning time of the Teach-In function is about 7 seconds.*
3. At the end of the learning phase, read the status of the **Teach-In feedback signal** (via digital output or safety Fieldbus) to verify that the Teach-in feedback signal flashes slowly (500 ms ON-state followed by 1500 ms OFF-state).

   ***Note**: in a fault condition given by the Teach-in function, the **Teach-In feedback signal** flashes faster (500 ms ON-state followed by 500 ms OFF-state) and the detection signal outputs switch to the OFF-state. Restart the procedure or open the system application to get details on the error.*
4. Validate the correctness of the system configuration set by the function (see "Validate the safety functions" on page 75).
5. If the set system configuration is ok, confirm the end of the validation through digital input or safety Fieldbus (same signal used for the function activation). The output set as **Teach-In feedback signal** switches to OFF-state.
6. If the set system configuration is not ok, confirm the end of the validation (step 5), then go back to step 1.

2.5.2.10 How to configure it in the system application

Parameter	Inxpect Safety	Inxpect Safety Studio
Learning area horizontal angular coverage and corridor width	**Settings** > **Advanced**	**DESIGN** > control unit card > **OTHER OPTIONS** > **TEACH-IN FUNCTION**
Digital input function	**Settings** > **Digital Input-Output**	**DESIGN** > control unit card > **DIGITAL INPUTS**
Digital output function	**Settings** > **Digital Input-Output**	**DESIGN** > control unit card > **DIGITAL OUTPUTS**

2.5.3 Anti-tampering functions: anti-rotation around axes

2.5.3.1 Anti-rotation around axes

The sensor detects rotation around its axes.

***Note**: the axes are those represented in the figure below, regardless of the installation position of the sensor.*

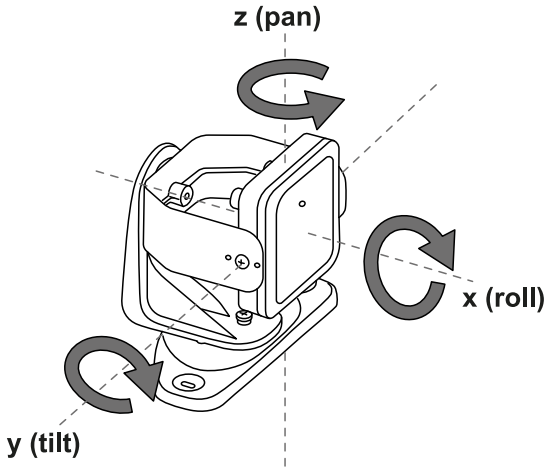

When the system configuration is saved, the sensor also saves its position. Later, if the sensor detects changes in rotation around these axes, it sends a tamper alert to the control unit. Upon reception of a tampering signal, the control unit deactivates the safety outputs. The sensor position can be saved also by an anti-masking reference saving signal, see "Anti-rotation reference saving signal activation" below.

***Note**: when the position is modified with respect to the saved references (i.e., when a sensor is rotated) and the anti-rotation around axes function is enabled, the Inxpect SRE 200 Series detects the tampering and sends the message within 5 s.*

The sensor can detect changes in rotation around the y-axis and the x-axis, even when it is switched off. The tamper alert is sent to the control unit at the following switch on.

2.5.3.2 Specificity of z-axis rotation

WARNING! The tamper alert due to a rotation around the z-axis is reset at the next switch on. For proper and safe operation of the system, validate the system again.

A change in rotation around the z-axis is detected if it is faster than 5° every 10 s and if the system is on.

If the sensor is tilted (y-axis) downwards in a range of [-85, -95]° or upwards in a range of [85, 95]°, the anti-rotation function is not guaranteed.

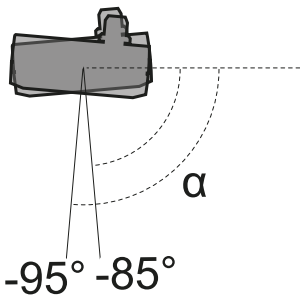

Sensor tilted downwards.

2.5.3.3 Anti-rotation reference saving signal activation

The anti-rotation reference saving signal can be activated through digital input or Fieldbus communication.

Digital input

The digital input must be set as **Anti-rotation reference saving**.

Fieldbus

For details about the communication protocol, see the Fieldbus protocol reference guide.

2.5.3.4 Enable the anti-rotation around axes function

The anti-rotation around axes function is disabled by default.

WARNING! If the function is disabled, the system cannot signal a change in the rotation of the sensor around the axes and, therefore, any changes in the monitored area. See "Checks when the anti-rotation around axes function is disabled" below.

WARNING! Take precautions to prevent tampering, if the function is disabled for at least one axis of one sensor and if the rotation around that axis is not protected with tamper-proof screws.

The function can be enabled and configured for each axis of each sensor individually via the system application.

2.5.3.5 When to enable

Enable the anti-rotation around axes function only if it is necessary to detect a change in the rotation of a sensor around a specific axis.

It is strongly suggested the function not be enabled if the sensor is installed on a moving element (e.g., carriage, vehicle) whose motion could change the sensor inclination (e.g., motion on a slope or in a curve).

2.5.3.6 Checks when the anti-rotation around axes function is disabled

When the anti-rotation around axes function is disabled, perform the following checks.

Safety function	Schedule	Action
Access detection function	Before each machinery restart	Check that the sensor is positioned as defined in the configuration. Check that the monitored area is the same as defined by the configuration. See "Validate the safety functions" on page 75.
Restart prevention function	Each time the safety outputs are deactivated	

2.5.3.7 How to configure it in the system application

Parameter	Inxpect Safety	Inxpect Safety Studio
Function enabling/disabling for each axis	**Settings** > **Anti-tampering**	**DESIGN** > sensor card > **ANTI-TAMPERING**
Digital input function	**Settings** > **Digital Input-Output**	**DESIGN** > control unit card > **DIGITAL INPUTS**

2.5.4 Anti-tampering functions: anti-masking

2.5.4.1 Masking signal

The sensor detects the presence of objects that could obstruct the field of view. When the system configuration is saved, the sensor memorizes the surrounding environment. If the sensor subsequently detects variations in the environment that could influence the field of view, it sends a masking signal to the control unit. The sensor monitors from -50° to 50° on the horizontal plane regardless of the horizontal angular coverage set. Upon receiving a masking signal, the control unit deactivates the safety outputs.

***Note**: the masking signal is not guaranteed in the presence of objects which cause reflection effects that bring their RCS below the minimum detectable threshold.*

***Note**: when the position is modified with respect to the saved references (i.e., when a sensor is masked) and the anti-rotation around axes function is enabled, the Inxpect SRE 200 Series detects the tampering and notifies it within 5 s.*

2.5.4.2 Environment memorization process

The sensor starts the process of memorizing the surrounding environment when the system application configuration is saved or when an anti-masking reference saving signal is received (see "Anti-masking reference saving signal activation" on the next page). From that moment, it waits for the system to exit the alarm status and for the scene to be static up to 20 seconds, then scans and memorizes the environment.

***NOTICE:** if the scene is not static during the 20 seconds interval, the system remains in a fault status (SIGNAL ERROR) and the system configuration must be saved again.*

It is recommended to start the memorization process after at least 3 minutes from turning on the system to guarantee that the sensor has reached the operating temperature.

Only at the conclusion of the memorization process it is possible for the sensor to send masking signals.

2.5.4.3 Anti-masking reference saving signal activation

The anti-masking reference saving signal can be activated through digital input or Fieldbus communication.

Digital input

The digital input must be set as **Anti-masking reference saving**.

Fieldbus

For details about the communication protocol, see the Fieldbus protocol reference guide.

2.5.4.4 Causes of masking

Possible causes of masking signals are the following:

- An object that obstructs the field of view of the sensor has been placed in the detection field.
- The environment in the detection field changes significantly, for example, if the sensor is installed on moving parts or if there are moving parts inside of the detection field.
- The configuration was saved with sensors installed in an environment that is different from the working environment.
- There were temperature fluctuations.

2.5.4.5 Masking signal when the system is turned on

If the system was off for several hours and there were temperature fluctuations, the sensor might send a false masking signal when it is turned on. The safety outputs activate automatically within 3 minutes when the sensor reaches its working temperature. This does not happen if this temperature is still very far from the reference temperature.

2.5.4.6 Settings

For each sensor, the anti-masking settings are the following:

Parameter	Min	Max	Notes
Maximum distance from the sensor in which the function is active	20 cm(7.87 in)	100 cm(3.28 ft)*	Adjustable in 10 cm (3.94 in) increments
Sensitivity	High, Medium, Low, Disabled		See "Sensitivity levels" below

Note*: only for S202A sensors, the maximum detection distance value is 50 cm(1.64 ft).*

Via the system application the function can be disabled and the sensitivity level and the distance can be set.

2.5.4.7 Sensitivity levels

These are the four levels of sensitivity:

Note*: the function has a gray area where the actual detection of a masking object depends on the RCS of the object and on the sensitivity level set. The high sensitivity level has the largest area, about 10-20 cm (3.94-7.87 in).*

Level	Description	Example application
High	The sensor has the highest sensitivity to changes in the environment. (Suggested level when the field of view is empty up to the set masking distance)	Installations with an empty environment and a height of less than one meter, where objects could occlude the sensor.
Medium	The sensor has low sensitivity to changes in the environment. Occlusion must be evident (deliberate tampering).	Installations with a height of more than one meter, where masking is likely to occur only if voluntary.

Level	Description	Example application
Low	The sensor detects masking only if the sensor occlusion is complete and the objects are highly reflective (e.g., metal, water) near the sensor.	Installations on moving parts, where the environment is changing continuously, but where static objects may be near the sensor (obstacles on the route).
Disabled	The sensor does not detect changes in the environment. **WARNING! If the function is disabled the system cannot signal the presence of objects that might impede normal detection (see "Checks when the anti-masking function is disabled" below).**	See "When to disable" below.

2.5.4.8 Checks when the anti-masking function is disabled

When the anti-masking function is disabled, perform the following checks.

Safety function	Schedule	Action
Access detection function	Before each machinery restart	Remove any objects that obstruct the field of view of the sensor. Reposition the sensor according to the initial installation.
Restart prevention function	Each time the safety outputs are deactivated	

2.5.4.9 When to disable

The anti-masking function should be disabled under the following conditions:

- (With restart prevention function) The monitored area includes moving parts that stop in different and unpredictable positions.
- The monitored area includes moving parts that vary their position while the sensors are in muting.
- The sensor is positioned on a part that can be moved.
- The presence of static objects is tolerated in the monitored area (e.g., loading/unloading area).

2.5.4.10 How to configure it in the system application

Parameter	Inxpect Safety	Inxpect Safety Studio
Function enabling/disabling	**Settings** > **Anti-tampering**	**DESIGN** > sensor card > **ANTI-TAMPERING**
Maximum distance		
Sensitivity		
Digital input function	**Settings** > **Digital Input-Output**	**DESIGN** > control unit card > **DIGITAL INPUTS**

2.5.5 System recondition

2.5.5.1 Function description

The system recondition function is useful for replacing an existing sensor without changing current settings.

2.5.5.2 Activation

Digital input

WARNING! If the system recondition function has been configured through the safety Fieldbus and the digital inputs, the function can be used from both.

The digital input must be set as **System recondition** or **Restart signal + System recondition**.

The function can be performed as:

- Single channel inputs/OSSDs (Category 2, according to EN ISO 13849-1)
- Dual channel inputs/OSSDs (Category 3, according to EN ISO 13849-1)

Fieldbus

For details about the communication protocol, see the Fieldbus protocol reference guide.

2.5.5.3 Replace a sensor with the system recondition function

See "Replace a sensor: System recondition function" on page 107.

2.5.5.4 How to configure it in the system application

Parameter	Inxpect Safety	Inxpect Safety Studio
Digital input function	**Settings** > **Digital Input-Output**	**DESIGN** > control unit card > **DIGITAL INPUTS**

2.5.6 Electromagnetic robustness

2.5.6.1 Electromagnetic robustness parameter

With the **Electromagnetic robustness** parameter, it is possible to increase the robustness of the system to electromagnetic interference (e.g., due to sensors of different systems installed too close to each other or problems on the CAN bus).

In the system application, the following levels of robustness can be set:

- **Standard** (default)
- **High**
- **Very High**

WARNING! The parameter impacts the system response time for the access detection safety function. According to the chosen level, the maximum guaranteed response time is 100 ms (Standard), 150 ms (High), or 200 ms (Very High).

2.5.6.2 How to configure it in the system application

Parameter	Inxpect Safety	Inxpect Safety Studio
Robustness level	**Settings** > **Advanced**	**DESIGN** > control unit card > **OTHER OPTIONS**

2.5.7 Surface moisture robustness

2.5.7.1 Availability

The surface moisture robustness is available only for S203A sensors with firmware version 5.1 or later.

2.5.7.2 Surface moisture robustness function

If there is water residue on the cover, the system may generates false alarms. With the Surface moisture robustness function, it is possible to increase the robustness of the system to better filter out the water residues.

WARNING! The maximum field of view programmable with the function enabled is reduced, see "Field of view limitations" below. Enable the function only if the limited field of view is enough for guarantee the safety of the dangerous area.

In the system application, the option can be enabled for each sensor individually, in both the stationary and mobile applications.

2.5.7.3 Field of view limitations

Shape	Limitation
Classic	For detection distances up to 3 m: horizontal angular coverage (left/right): from 0 to 50° For detection distances from 3 to 5 m: horizontal angular coverage (left/right): from 0 to 30°
Corridor	Width: left side/right side: from 0 to 1.5 m

2.5.7.4 How to configure it in the system application

Parameter	Inxpect Safety	Inxpect Safety Studio
Function enabling/disabling	**Settings** > **Advanced**	**DESIGN** > control unit card > **OTHER OPTIONS**

2.6 Applications

Contents

This section includes the following topics:

2.6.1 Basic concepts **50**
2.6.2 Stationary application **51**
2.6.3 Mobile application **51**

2.6.1 Basic concepts

2.6.1.1 Determining factors

The sensor installation height and inclination should be decided together with the angular coverage and the detection distances in order to have optimal coverage of the dangerous area.

2.6.1.2 Sensor installation height

The installation height (h) is the distance between the center of the sensor and the ground or reference plane of the sensor.

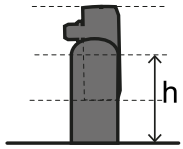

2.6.1.3 Sensor inclination

The sensor inclination is the rotation of the sensor around its y-axis. Inclination is defined as the angle between a line perpendicular to the sensor and a line parallel to the ground. Three examples are presented as follows:

- sensor tilted upwards: α positive
- straight sensor: α = 0
- sensor tilted downwards: α negative

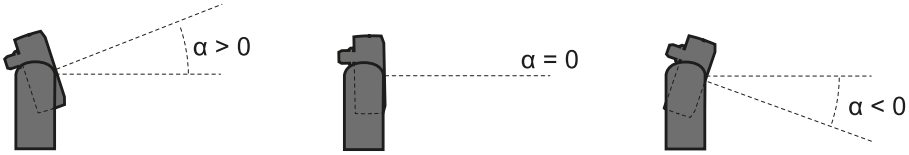

2.6.2 Stationary application

2.6.2.1 Suitable sensors

To determine which sensors are suitable for stationary applications, see "Appendix A: sensor lines" on page 149.

2.6.3 Mobile application

2.6.3.1 Suitable sensors

To determine which sensors are suitable for mobile applications, see "Appendix A: sensor lines" on page 149.

2.6.3.2 Speed limits

The speed of the vehicle or part of the machinery at which detection is guaranteed depends on the sensor model-type. To learn the speed range for each sensor, see "Appendix A: sensor lines" on page 149.

2.6.3.3 Detection signal generation conditions

When the sensor is mounted on moving parts, it will detect static objects as moving objects.

The sensor will trigger a detection signal if the following conditions are met:

- The RCS (Radar Cross-Section) of static objects is greater than or equal to the RCS of a human body.
- The relative speed between the objects and the sensor is greater than the minimum speed necessary for detection.

2.6.3.4 Prevention of unexpected restart

As for stationary installations, when the moving part where the sensor is installed stopped due to detection, the system will switch to the restart prevention safety function (if **Safety working mode** is not **Always-on access detection**), and the sensor will detect the presence of a human body (see Installation recommendations in "Appendix A: sensor lines" on page 149). Static objects are then automatically filtered out and no longer detected.

The restart of the moving vehicle or moving part of the machinery in the presence of static objects can be prevented using the following methods:

- Static object detection option enabled (see "Restart prevention function: static object detection option" on page 39).
- Anti-masking function: if the function is enabled, an error will occur when the static object will be close enough to limit the detection of the sensor.
  Note*: if the anti-masking function is active while the sensor is also moving, this could generate false alarms since the environment change during movement could be detected as tampering.*
- Manual restart: the restart is triggered externally and only once the static object is removed from the trajectory of the moving vehicle or moving part.
- Application logic on PLC/control unit that permanently stops the moving part if multiple stops occur immediately after the restart of the part. If the vehicle or the part stops very quickly after the restart, this probably means that there is a static obstacle. Once the moving part is stopped, the sensor does not detect the object anymore and therefore the part moves but it stops again as soon as it detects the object again.

2.7 Digital I/O interfaces

Contents

This section includes the following topics:

2.7.1 Digital inputs **52**
2.7.2 Digital outputs **53**

2.7.1 Digital inputs

2.7.1.1 Introduction

The system has two type 3 dual channel digital inputs (according to IEC/EN 61131-2). Alternatively, the four channels can be used as single channel digital inputs (category 2). The ground reference is common for all the inputs (see "Terminal blocks and connector pin-outs" on page 139).

When using digital inputs, it is mandatory that the additional SNS input "V+ (SNS)" is connected to 24 V DC and that the GND input "V- (SNS)" is connected to the ground in order to:

- perform the correct input diagnostic
- assure the system safety level

2.7.1.2 Input functions

The function of each digital input must be programmed via the system application. The available functions are the following:

- **Stop signal**
- **Restart signal**
- **Muting group 1** or **Muting group 2**
- **Dynamic configuration switch**
- **Fieldbus controlled** (if available)
- **System recondition**
- **Teach-In**
- **Restart signal + System recondition**: according to the input signal duration, performs the **Restart signal** function or the **System recondition** function.
- **Anti-masking reference saving**
- **Anti-rotation reference saving**

For details about digital input signals, see "Digital input signals" on page 116.

2.7.1.3 Single or dual channel option

By default, each digital input function needs a signal on both channels to provide the redundancy required by Category 3.

The following digital input functions can also be used as a single channel (Category 2):

- **Restart signal**
- **Fieldbus controlled**
- **System recondition**
- **Teach-In**
- **Restart signal + System recondition**
- **Anti-masking reference saving**
- **Anti-rotation reference saving**

2.7.1.4 Redundancy mode

Two types of redundancy mode are available for the dual channels input functions:

- **Coherent redundancy**

Input Channel 1	Input Channel 2	Input logic value
0	0	Low
1	1	High
0	1	Error
1	0	Error

- **Inverted redundancy**

Input Channel 1	Input Channel 2	Input logic value
0	1	Low
1	0	High
0	0	Error
1	1	Error

By default, the redundancy mode is coherent. For the following input functions, the inverted redundancy mode can be set to guarantee compatibility with different connected devices:

- **Muting group “N”** (only if pulse width = 0)
- **Restart signal**
- **Fieldbus controlled**
- **Dynamic configuration switch**
- **System recondition**
- **Teach-In**
- **Restart signal + System recondition**
- **Anti-masking reference saving**
- **Anti-rotation reference saving**

2.7.1.5 How to configure it in the system application

Parameter	Inxpect Safety	Inxpect Safety Studio
Digital input function	**Settings** > **Digital Input-Output**	**DESIGN** > control unit card > **DIGITAL INPUTS**
Single/dual channel input		
Dual channel redundancy		

2.7.1.6 SNS input

The control unit is provided with an **SNS** input (high logic level (1) = 24 V) needed to check the correct functioning of the inputs.

NOTICE: *if at least one input is connected, the SNS input "V+ (SNS)" and the GND input "V- (SNS)" must also be connected.*

2.7.2 Digital outputs

2.7.2.1 Outputs

The system has four digital OSSD short-circuit protected outputs that can be used individually (detection warning) or programmed as dual channel safety outputs (detection signal) to ensure the system safety level.

An output is activated when it switches from OFF to ON-state (from 0 V to 24 V) and deactivated when it switches from ON to OFF-state (from 24 V to 0).

2.7.2.2 Output functions

The function of each digital output must be programmed via the system application.

The available functions are the following:

- **Detection signal "N"**: (e.g., alarm signal) switches the selected output to the OFF-state when a sensor detects motion in detection field N*, receives a stop signal from the related input, or when there is a system failure. The selected output remains in OFF-state for at least 100 ms.
  Note*: "N" is the number of the corresponding detection field (e.g., **Detection signal 1** for detection field 1, **Detection signal 2** for detection field 2).*

  Note*: when an OSSD is configured as **Detection signal "N"**, a second OSSD is automatically assigned to it to provide a safe signal.*
- **Detection warning "N"** - only eXtended Line: (e.g., alarm signal) switches the selected output to the OFF-state when a sensor detects motion in detection field N*, receives a stop signal from the related input, or when there is a system failure. The selected output remains in OFF-state for at least 100 ms.
  Note*: N is the number of the corresponding detection field (e.g., **Detection warning 1** for detection field 1, **Detection warning 2** for detection field 2).*
- **Detection signal group 1** or **Detection signal group 2**: switches the selected output to the OFF-state when at least one sensor detects motion in a detection field belonging to the group (see "Detection signal/warning group settings" on the next page), receives a stop signal from the related input, or when there is a system failure. The selected output remains in OFF-state for at least 100 ms.
  Note*: when an OSSD is configured as **Detection signal group 1** or **Detection signal group 2**, a second OSSD is automatically assigned to it to provide a safe signal.*
- **Detection warning group 1** or **Detection warning group 2** - only eXtended Line: switches the selected output to the OFF-state when at least one sensor detects motion in a detection field belonging to the group (see "Detection signal/warning group settings" on the next page), receives a stop signal from the related input, or when there is a system failure. The selected output remains in OFF-state for at least 100 ms.
- **System diagnostic signal**: switches the selected output to the OFF-state when a system fault is detected.

- **Muting enable feedback signal**
- **Fieldbus controlled** (if available)
- **Restart feedback signal**
- **Static object detection feedback signal**
- **Teach-In feedback signal**

Each output status can be retrieved by Fieldbus communication (if available).

2.7.2.3 Output configurations

The system installer can decide to configure the system as follows:

- two dual channel safety outputs (e.g., **Detection signal 1** and **Detection signal 2**, usually alarm and warning signals)
- one dual channel safety output (e.g., **Detection signal 1**) and two single channel outputs (e.g., **System diagnostic signal** and **Detection warning 2**)
- each output as a single output (e.g., **Detection warning 2**, **System diagnostic signal**, **Muting enable feedback signal** and **Restart feedback signal**)

WARNING! To use Inxpect SRE 200 Series for a category 3 safety system, both the channels of a safety output must be connected to the safety system. Configuring a safety system with only one channel safety output may result in serious injuries due to an output circuit fault that causes the machinery to fail to stop.

2.7.2.4 Dual channel safety output configuration

The dual channel safety output is automatically managed by the system application, and it only matches the single OSSD outputs as follows:

- OSSD 1 with OSSD 2
- OSSD 3 with OSSD 4

2.7.2.5 Detection signal/warning group settings

Each detection field of each sensor can be assigned to a group to associate them with the same safety output.

Each detection field of each sensor can be associated with one group or both groups via system application.

WARNING! Consider the detection field dependency choice during the group's configuration. See "Detection fields dependency and detection signal generation" on page 26

Example

It is possible to configure that the following detection fields belong to group 1:

- Detection field 1 of Sensor 1

- Detection field 1 of Sensor 3

- Detection field 2 of Sensor 1

By doing so, a specific output assigned to **Detection signal group 1** or **Detection warning group 1** will switch to the OFF-state when a movement is detected in one of these detection fields.

2.7.2.6 Output status of detection signal outputs

The output status is the following:

- activated output (24 V DC): idle signal, no motion detected, and normal functioning
- deactivated output (0 V DC): motion detected in the detection field or failure detected in the system

2.7.2.7 Pulse test for detection signal outputs

A pulse test is provided for the detection signal output, in particular for the outputs configured as follows:

- **Detection signal "N"**
- **Detection warning "N"**
- **Detection signal group "N"**
- **Detection warning group "N"**

The test is performed with the idle signal periodically pulsed to 0 V to detect short-circuits to either 0 V or 24 V.

The pulse duration at 0 V (T_L) can be set to 300 µs or 2 ms via system application.

***Note**: the devices connected to the OSSD should not respond to these temporary, self-diagnostic 0 V pulses of the signal.*

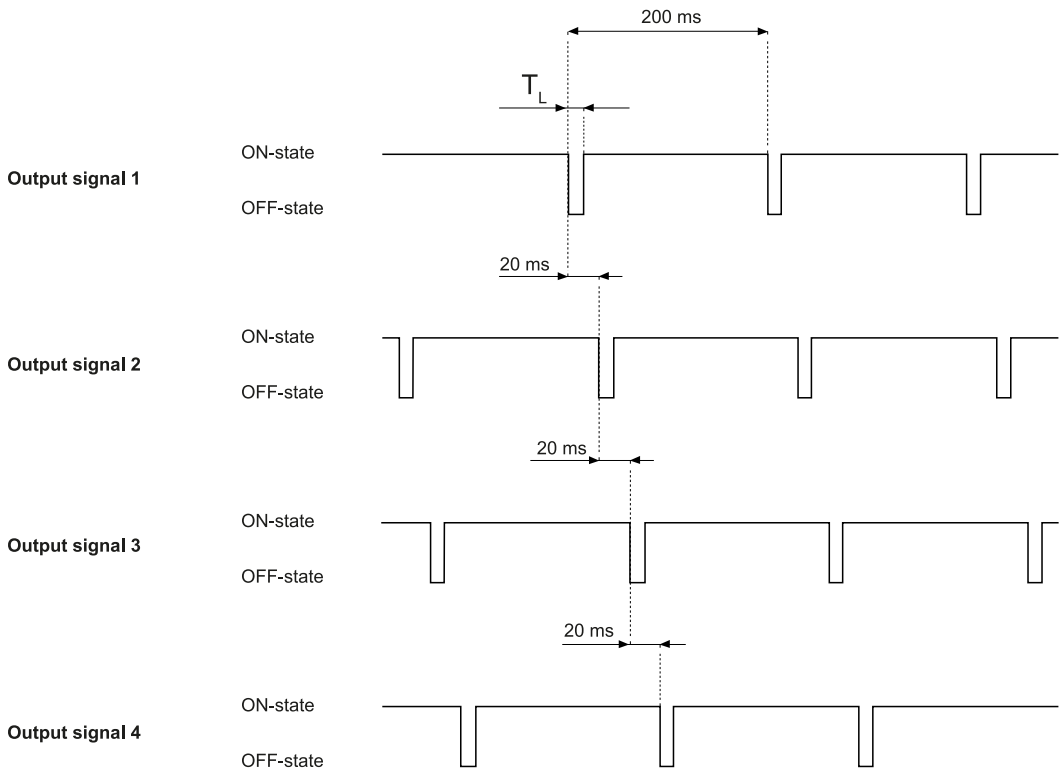

For details, see "Technical references" on page 110.

2.7.2.8 OSSD diagnostic checks

Per default, the OSSD Diagnostic check (e.g., for short-circuits) is deactivated. This check can be activated via system application .

If activated, the control unit will monitor:

- short-circuit between OSSDs
- 24 V short-circuit
- open circuit (only trips on demand, i.e., when the safety function is activated on the transition from 24 V to GND)

***Note**: the short-circuit to GND (fail-safe fault) is always monitored even if the OSSD diagnostic check is deactivated.*

WARNING! If an external common cause failure leads to a 24 V short-circuit on both the OSSDs, the control unit cannot communicate the safe state condition via OSSD. The integrator is responsible for avoiding this condition by monitoring the test pulses generated periodically on the OSSDs.

WARNING! To be compliant with the IEC TS 61496-5 standard, it is necessary to activate the OSSD diagnostic checks and set the Anti-masking sensitivity parameter to High.

2.7.2.9 External resistor for OSSD outputs

To guarantee the correct connection between the OSSDs of the control unit and an external device, it may be necessary to add an external resistor.

If the pulse width set (**OSSD Pulse width**) is 300 µs, it is strongly recommended to add an external resistor to guarantee the discharge time of the capacitive load. If it is set at 2 ms, an external resistance must be added if the resistor of the external load is greater than the maximum resistive load allowed (see "Technical data" on page 111).

Below are some standard values for the external resistor:

OSSD Pulse width value	External resistor (R_e)
300 µs	1 kΩ
2 ms	10 kΩ

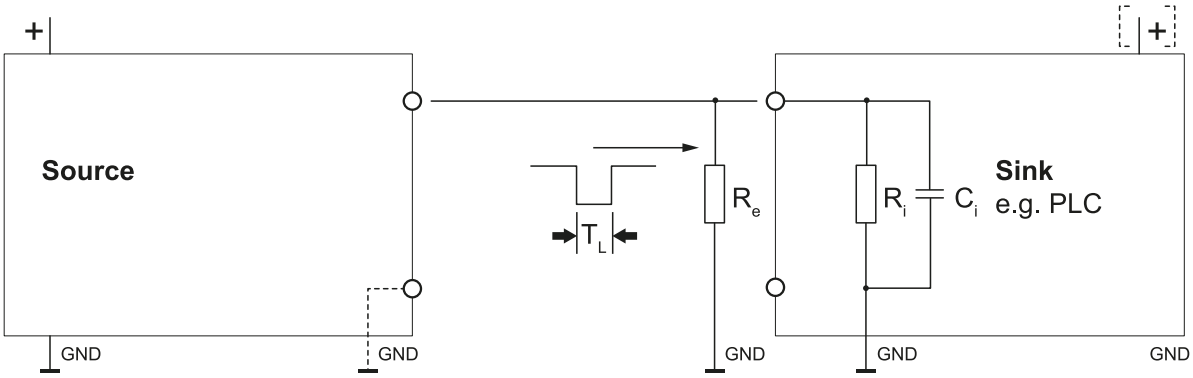

2.7.2.10 How to configure it in the system application

Parameter	Inxpect Safety	Inxpect Safety Studio
Digital output function	**Settings** > **Digital Input-Output**	**DESIGN** > control unit card > **DIGITAL OUTPUTS**
Detection signal group	**Settings** > **Detection field groups**	**DESIGN** > control unit card > **DETECTION FIELD GROUPS**
Detection signal pulse test	**Settings** > **Digital Input-Output** > **OSSD Pulse width**	**DESIGN** > control unit card > **DIGITAL OUTPUTS**
OSSD diagnostic check activation	**Settings** > **Digital Input-Output**	**DESIGN** > control unit card > **DIGITAL OUTPUTS**

2.8 Data exchange interfaces

Contents

This section includes the following topics:

2.8.1 Fieldbus communication (PROFIsafe) **56**
2.8.2 Fieldbus communication (Safety over EtherCAT® - FSoE) **59**
2.8.3 Fieldbus communication (CIP Safety™ on EtherNet/IP™) **60**
2.8.4 MODBUS communication **62**

2.8.1 Fieldbus communication (PROFIsafe)

2.8.1.1 PROFIsafe support

The safety communication using PROFIsafe is available on all the control units provided with the PROFIsafe interface. For details, see "Control units" on page 19.

2.8.1.2 Siemens PLC and TIA Portal compatibility

The PROFIsafe modules embedded in the control units are compliant only with TIA Portal software (from version 15.1 onward) and Siemens PLCs in the 1200 and 1500 series.

Older versions of Siemens software or older PLC models do not support 12-byte structures.

2.8.1.3 Communication with the machinery

The Fieldbus makes the following actions possible:

- Choose preset configurations dynamically.
- Read the status of the inputs.
- Read the status of each detection field
- Control the outputs.
- Read the target data.
- Mute the sensors.
- Enable the restart signal.
- Enable the system recondition signal.
- Save the anti-masking reference
- Save the anti-rotation reference

For details, see the PROFIsafe communication Reference guide.

2.8.1.4 Input data coming from the PLC

If neither digital input nor OSSD is configured as **Fieldbus controlled**, the behavior of the input data coming from the PLC is as described below:

Condition	Input data coming from the PLC	System behavior
IOPS (PLC provider status) = bad	the last valid value of the input variable is retained	the system keeps working in its normal operating state
Connection loss	the last valid value of the input variable is retained	the system keeps working in its normal operating state
After power-up	the initial values (set to 0) are used for the input variables	the system keeps working in its normal operating state

If at least one digital input or OSSD is configured as **Fieldbus controlled**, the behavior of the input data coming from the PLC is as described below:

Condition	Input data coming from the PLC	System behavior
IOPS (PLC provider status) = bad	the last valid value of the input variable is retained	the system keeps working in its normal operating state
Connection loss	the last valid value of the input variable is retained	the system transits to safe state, deactivating the OSSDs, until the connection is re-established.
After power-up	the initial values (set to 0) are used for the input variables	the system remains in a safe state with the OSSDs deactivated, until the input data are passivated.

2.8.1.5 Data exchanged through PROFIsafe

The following table details the data exchanged through the Fieldbus communication:

WARNING! The system is in the safe state if the control unit status byte of the System configuration and status module PS2v6 or PS2v4 is different from "0xFF".

Data type	Description	Communication direction
Safe	SYSTEM STATUS DATA Control unit: • internal status • status of each of the four OSSDs • status of each single channel and dual channel input Sensor: • status of each detection field (target detected or not) or error status • status of static object detection option • muting status	from the control unit
Safe	SYSTEM SETTING COMMAND Control unit: • set the ID of the dynamic configuration that shall be activated • set the status of each of the four OSSDs • save the reference for the anti-rotation around axes • enable the restart signal • enable the system recondition signal • activate the Teach-In function • save the anti-masking reference • save the anti-rotation reference Sensor: • set the muting status	to the control unit
Safe	DYNAMIC CONFIGURATION STATUS • ID of the dynamic configuration currently active • signature (CRC32) of the dynamic configuration ID currently active	from the control unit
Safe	TARGET DATA • Current distance and angle of the targets detected by each sensor. For each detection field of each sensor, only the closest target to the sensor is considered.	from the control unit
Unsafe	DIAGNOSTIC DATA Control unit: • internal status with an extended description of the error condition Sensor: • internal status with an extended description of the error condition	from the control unit
Unsafe	SYSTEM STATUS AND TARGET DATA	from the control unit
Unsafe	TEACH-IN FUNCTION	from the control unit

2.8.1.6 How to configure it in the system application

Parameter	Inxpect Safety	Inxpect Safety Studio
See "Parameters list" below	**Admin** > **Fieldbus Parameters**	**DESIGN** > control unit card > **PROFIsafe FIELDBUS**

2.8.1.7 Parameters list

Parameter	Min	Max	Default
System configuration and status PS2v6	1	65535	145
Sensors information PS2v6	1	65535	147
Sensor 1 detection status PS2v6	1	65535	149
Sensor 2 detection status PS2v6	1	65535	151
Sensor 3 detection status PS2v6	1	65535	153

Parameter	Min	Max	Default
Sensor 4 detection status PS2v6	1	65535	155
Sensor 5 detection status PS2v6	1	65535	157
Sensor 6 detection status PS2v6	1	65535	159
System configuration and status PS2v4	1	65535	146
Sensors information PS2v4	1	65535	148
Sensor 1 detection status PS2v4	1	65535	150
Sensor 2 detection status PS2v4	1	65535	152
Sensor 3 detection status PS2v4	1	65535	154
Sensor 4 detection status PS2v4	1	65535	156
Sensor 5 detection status PS2v4	1	65535	158
Sensor 6 detection status PS2v4	1	65535	160

2.8.2 Fieldbus communication (Safety over EtherCAT® - FSoE)

2.8.2.1 FSoE support

The safety communication using FSoE is available on all the control units provided with the FSoE interface. For details, see "Control units" on page 19.

2.8.2.2 Communication with the machinery

The Fieldbus makes the following actions possible:

- Choose preset configurations dynamically.
- Read the status of the inputs.
- Read the status of each detection field
- Control the outputs.
- Mute the sensors.
- Enable the restart signal.
- Enable the system recondition signal.

For details, see the FSoE communication Reference guide.

2.8.2.3 Data exchanged through FSoE

The following table details the data exchanged through the Fieldbus communication:

WARNING! The system is in the safe state if Byte 0 of the selected TxPDO has at least one of its bits equal to 0, except for bit 4, which can assume any value.

Data type	Description	Communication direction
Safe	SYSTEM STATUS DATA Control unit: • internal status • status of each of the four OSSDs • status of each of single channel inputs and dual channel inputs Sensor: • status of each detection field (target detected or not) or error status • status of static object detection for each detection field • muting status	from the control unit
Safe	SYSTEM SETTING COMMAND Control unit: • set the ID of the dynamic configuration that shall be activated • set the status of each of the four OSSDs • enable the system recondition signal • enable the restart signal • save the anti-masking reference • save the anti-rotation reference Sensor: • set the muting status	to the control unit
Safe	DYNAMIC CONFIGURATION STATUS • ID of the dynamic configuration currently active • signature (CRC32) of the dynamic configuration ID currently active	from the control unit
Unsafe	DIAGNOSTIC DATA Control unit: • internal status with an extended description of the error condition Sensor: • internal status with an extended description of the error condition	from the control unit
Unsafe	SYSTEM STATUS	from the control unit

2.8.2.4 How to configure it in the system application

Parameter	Inxpect Safety	Inxpect Safety Studio
See "Parameters list" below	**Admin** > **Fieldbus Parameters**	**DESIGN** > control unit card > **FSoE FIELDBUS**

2.8.2.5 Parameters list

Parameter	Min	Max	Default
FSoE Safe Address	1	65535	145

2.8.3 Fieldbus communication (CIP Safety™ on EtherNet/IP™)

2.8.3.1 CIP Safety support

Safety communication using CIP Safety on EtherNet/IP is available on all the control units provided with the CIP Safety interface. For details, see "Control units" on page 19.

2.8.3.2 Communication with the machinery

The Fieldbus makes the following actions possible:

- Choose preset configurations dynamically.
- Read the status of the inputs.
- Read the status of each detection field
- Control the outputs.
- Mute the sensors.
- Enable the restart signal.
- Enable the system recondition signal.
- Save the anti-masking reference
- Save the anti-rotation reference

For details, see the CIP Safety communication Reference guide.

2.8.3.3 Data exchanged through CIP Safety

WARNING! The system is in the safe state if Byte 0 of the selected safety input connection (T2O) has at least one of its bits equal to 0, except for bit 4, which can assume any value.

The following table details the data exchanged through the Fieldbus communication:

Data type	Description	Communication direction
Safe	SYSTEM STATUS DATA Control unit: • internal status • status of each of the four OSSDs • status of each of single channel inputs and dual channel inputs Sensor: • status of each detection field (target detected or not) or error status • status of static object detection for each detection field • muting status	from the control unit
Safe	SYSTEM SETTING COMMAND Control unit: • set the ID of the dynamic configuration that shall be activated • set the status of each of the four OSSDs • enable the system recondition signal • enable the restart signal • activate the Teach-In function • save the anti-masking reference • save the anti-rotation reference Sensor: • set the muting status	to the control unit
Safe	DYNAMIC CONFIGURATION STATUS • ID of the dynamic configuration currently active • signature (CRC32) of the dynamic configuration ID currently active	from the control unit
Unsafe	DIAGNOSTIC DATA Control unit: • internal status with an extended description of the error condition Sensor: • internal status with an extended description of the error condition	from the control unit
Unsafe	SYSTEM STATUS	from the control unit
Unsafe	TEACH-IN FUNCTION	from the control unit

2.8.3.4 How to configure it in the system application

Parameter	Inxpect Safety	Inxpect Safety Studio
See "Parameters list" below	**Admin** > **Fieldbus Parameters**	**DESIGN** > control unit card > **CIP Safety FIELDBUS**

2.8.3.5 Parameters list

Parameter	Min	Max	Default
IP Address	-		DHCP
Network mask	-		DHCP
Gateway	-		DHCP
Host name	-		[empty]
Safety Network Number (SNN)	-		0xFFFFFFFFFFFF
Fieldbus endianness (only for non-safe connections)	Big Endian, Little Endian		Big Endian

2.8.4 MODBUS communication

2.8.4.1 MODBUS support

MODBUS communication is available on all the control units provided with the MODBUS interface. For details, see "Control units" on page 19.

2.8.4.2 MODBUS communication enabling

The MODBUS communication can be enabled and set via the system application

Within the Ethernet network, the control unit acts like a server. The client must send requests to the IP address of the server on the MODBUS listening port (default port is 502).

2.8.4.3 Data exchanged through MODBUS

The following table details the data exchanged through the MODBUS communication:

Data type	Description	Communication direction
Unsafe	SYSTEM STATUS DATA Control unit: • internal status • status of each of the four OSSDs • status of each single channel and dual channel input • revision information Sensor: • status of each detection field (target detected or not) or error status • muting status • revision information	from the control unit
Unsafe	DYNAMIC CONFIGURATION STATUS • ID of the dynamic configuration currently active • signature (CRC32) of the dynamic configuration ID currently active	from the control unit
Unsafe	TARGET DATA • Current distance and angle of the targets detected by each sensor. For each detection field of each sensor, only the closest target to the sensor is considered.	from the control unit

Data type	Description	Communication direction
Unsafe	DIAGNOSTIC DATA Control unit: • internal status with an extended description of the error condition Sensor: • internal status with an extended description of the error condition	from the control unit
Unsafe	TEACH-IN FUNCTION	from the control unit

2.8.4.4 How to configure it in the system application

Parameter	Inxpect Safety	Inxpect Safety Studio
See "Parameters list" below	**Admin** > **MODBUS Parameters** **Admin** > **Network Parameters**	**DESIGN** > control unit card > **MODBUS** **DESIGN** > control unit card > **MODBUS** > **SET DEVICE ETHERNET PARAMETERS**

2.8.4.5 Parameters list

Parameter	Min	Max	Default
MODBUS Enable	Enabled, Disabled		Enabled
MODBUS Listening port	1	65534	502
Ethernet IP Address	-	-	192.168.0.20
Ethernet Netmask	-	-	255.255.255.0
Ethernet Gateway	-	-	192.168.0.1
Ethernet TCP port	1	65535	65534

3. Installation and usage

3.1 Installation and use procedures

Contents

This section includes the following topics:

3.1.1 Before installation **64**
3.1.2 Install Inxpect SRE 200 Series **64**
3.1.3 Set the sensor inclination with a 1° precision **71**
3.1.4 Configure Inxpect SRE 200 Series **74**
3.1.5 Validate the safety functions **75**
3.1.6 Fieldbus network integration **78**
3.1.7 Other procedures **79**

3.1.1 Before installation

3.1.1.1 Materials required

- Two tamper-proof screws (see "Tamper-proof screws specifications" on page 114) to mount each sensor.
- Cables to connect the control unit to the first sensor and the sensors to one another (see "CAN bus cables recommended specifications" on page 114).
- A data USB cable with a micro-USB connector (micro-B type) or, only if the Ethernet port is available, an Ethernet cable to connect the control unit to the computer.
- A bus terminator (product code: 07000003) with resistance of 120 Ω for the last sensor of the CAN bus.
- A screwdriver for tamper-proof screws (see "Tamper-proof screws specifications" on page 114) to be used with the Hex pin security bit supplied in the control unit package.

3.1.1.2 Operating system required

- Microsoft Windows 64 bit 11 or later
- Apple OS X 14.0 Sonoma or later

3.1.1.3 Install the system application (Inxpect Safety or Inxpect Safety Studio)

***Note**: if the installation fails, the dependencies needed by the application may be missing. Update your operating system or contact our Technical Support to receive assistance.*

1. Download the application from the https://tools.inxpect.com website and install it on the computer.
2. With Microsoft Windows operating system, download and install from the same site also the driver for USB connection.

3.1.1.4 Initiate Inxpect SRE 200 Series

1. Calculate the sensor position and the depth of the dangerous area (see "Separation distance calculation" on page 134).
2. " Install Inxpect SRE 200 Series".
3. "Configure Inxpect SRE 200 Series".
4. "Validate the safety functions".
5. Optional. Integrate the Fieldbus network, see "Fieldbus network integration" on page 78.

3.1.2 Install Inxpect SRE 200 Series

3.1.2.1 Install procedure

1. "Install the control unit".
2. Optional. "Mount 3-axis bracket".
3. "Install the sensors".

4. "Connect the sensors to the control unit".
   ***Note**: connect the sensors to the control unit off-site if access to the connectors becomes difficult once installed.*

3.1.2.2 Install the control unit

WARNING! To prevent tampering, make sure the control unit is only accessible to authorized personnel (e.g., key-locked electrical panel)

1. Mount the control unit on the DIN rail.
2. Make electrical connections (see "Terminal blocks and connector pin-outs" on page 139 and "Electrical connections" on page 141).

***NOTICE:** if at least one input is connected, the SNS input "V+ (SNS)" and the GND input "V- (SNS)" must also be connected.*

***NOTICE:** when powered, the system takes about 20 s to start. During that period, the outputs and the diagnostic functions are deactivated, and the green sensor status LEDs of the connected sensors in the control unit flash.*

***NOTICE:** make sure to avoid any EMC interference during the control unit installation.*

***Note**: to correctly connect the digital inputs, see "Voltage and current limits for digital inputs" on page 139.*

3.1.2.3 Mount 3-axis bracket

The bracket that allows rotation around the x-axis (roll) is an accessory in the package.

***NOTICE:** for environments with strong vibrations, it is recommended to use the 2-axis bracket instead.*

***Note**: for an example of sensor installation, see "Examples of sensor installation" on page 69.*

1. Unscrew the screw at the bottom and remove the bracket with the sensor and the aligning ring.

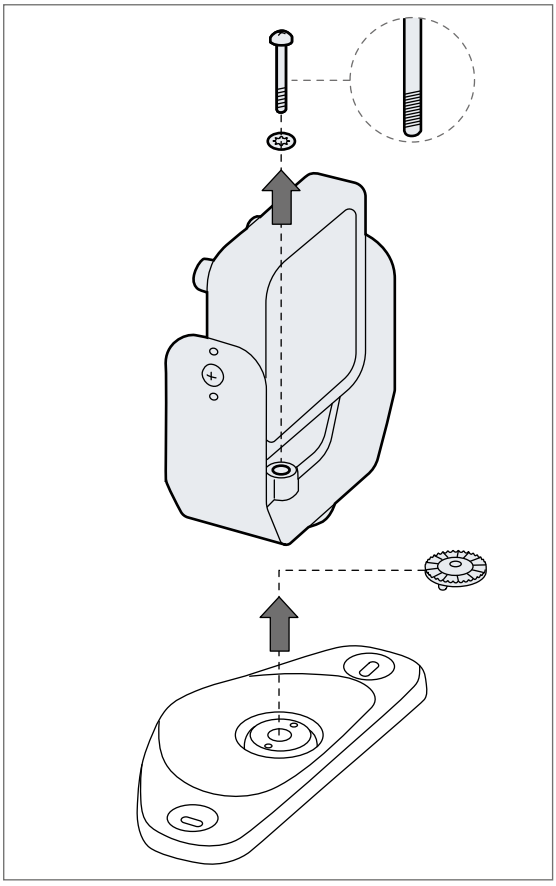

2. Attach the roll bracket to the base. Use the tamper-proof screw provided with the bracket.

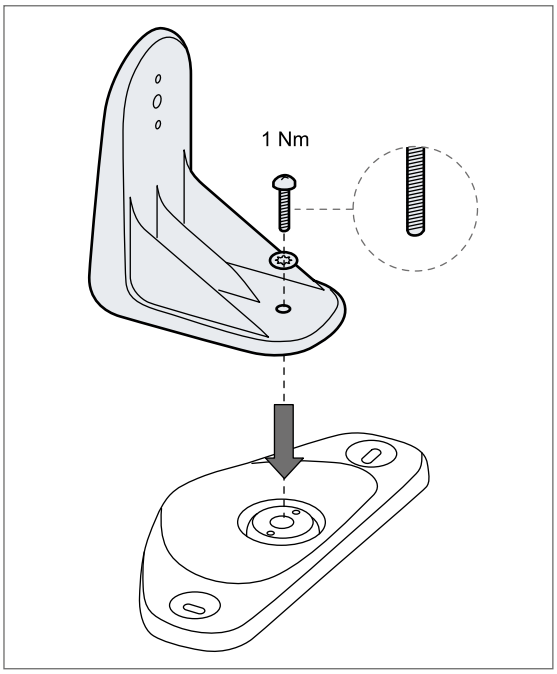

3. Mount the bracket with the sensor and the aligning ring. Use the tamper-proof screw provided with the bracket.

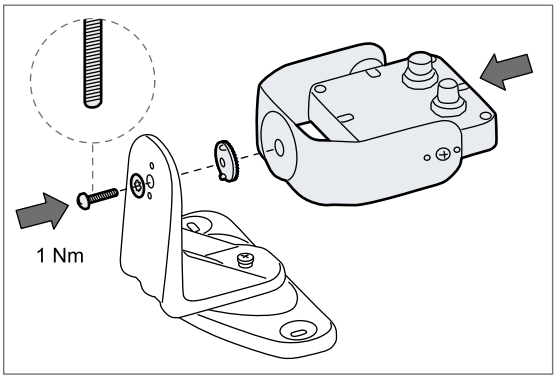

3.1.2.4 Install the sensors

***Note**: for an example of sensor installation, see "Examples of sensor installation" on page 69.*

***Note**: the usage of a thread-locking fluid on the threads of fasteners is suggested, especially when the sensor is installed on a moving or vibrating part of the machinery.*

***Note**: if no bracket is used for sensor installation, use tamper-proof screws and threadlocker.*

1. Position the sensor as indicated in the configuration report and fasten the bracket with two tamper-proof screws directly onto the floor or another support.
   NOTICE: *make sure the support does not inhibit machinery commands.*

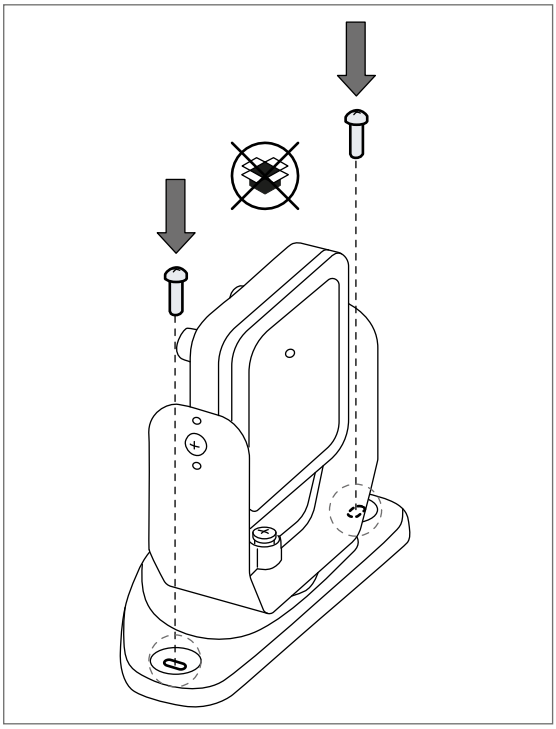

2. With an Allen key, loosen the screw at the bottom to pan the sensor.
   Note*: to avoid damaging the bracket, loosen the screw completely before panning the sensor.*

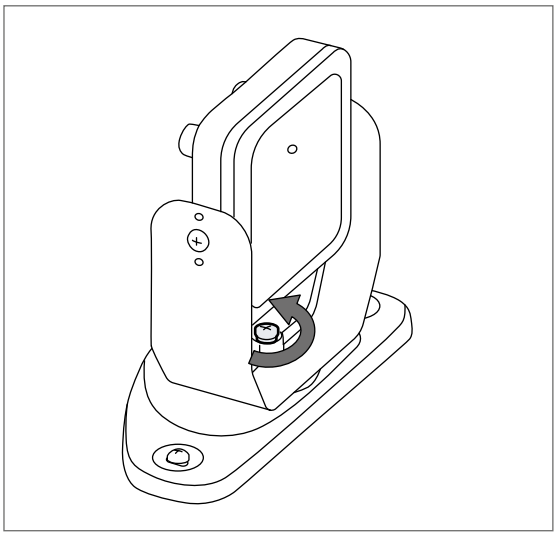

3. Pan the sensor until it reaches the desired position.
   Note*: a notch is equal to a 10° of rotation.*

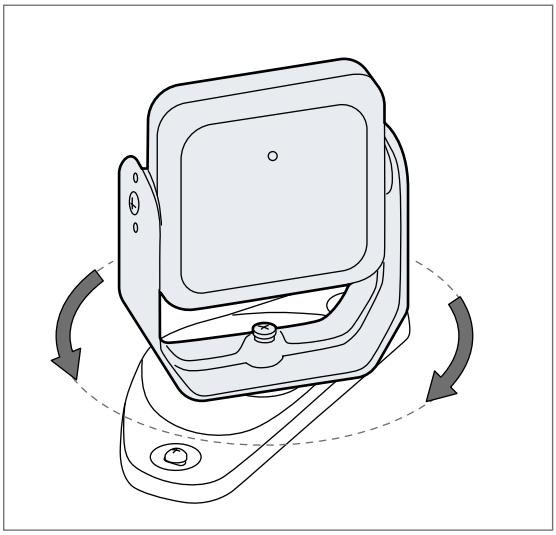

4. Tighten the screw.

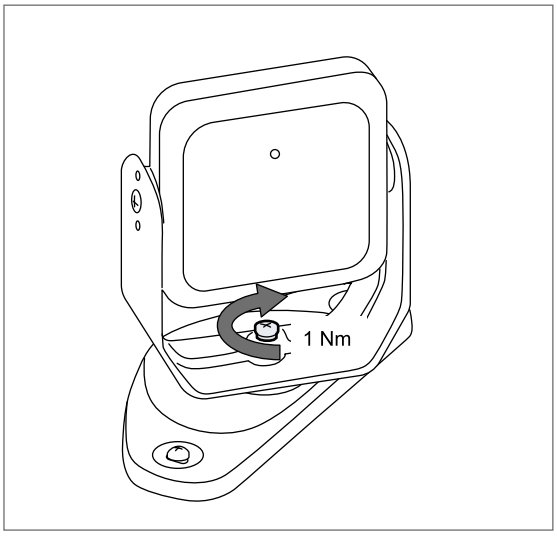

5. Loosen the tamper-proof screws to tilt the sensor.

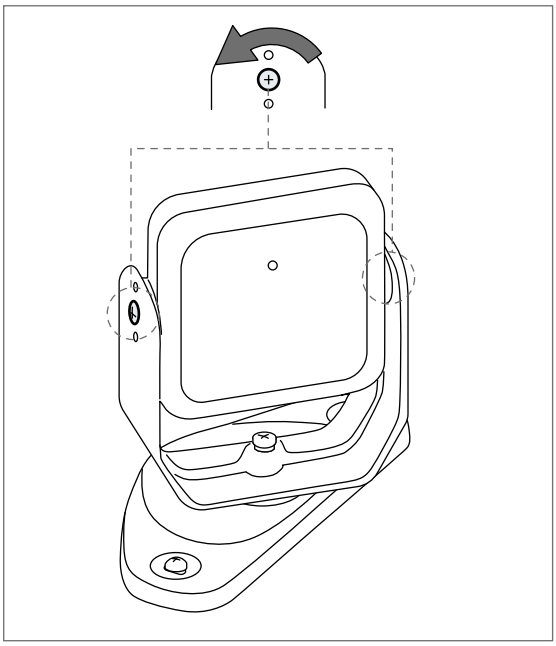

6. Tilt the sensor to the desired inclination (see "Applications" on page 50).
   ***Note**: a notch is equal to a 10° of inclination.*

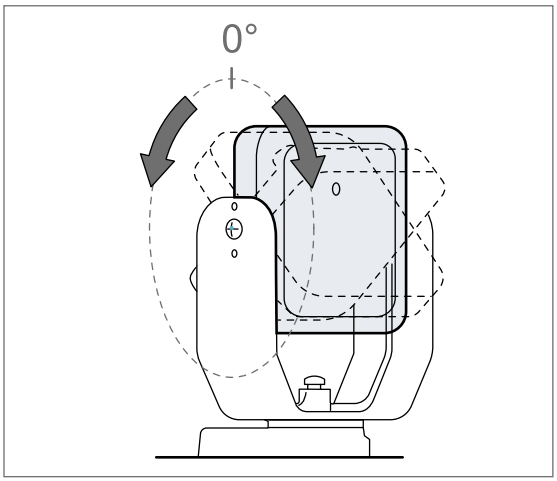

7. To set the inclination with 1° precision, see "Set the sensor inclination with a 1° precision" on page 71.

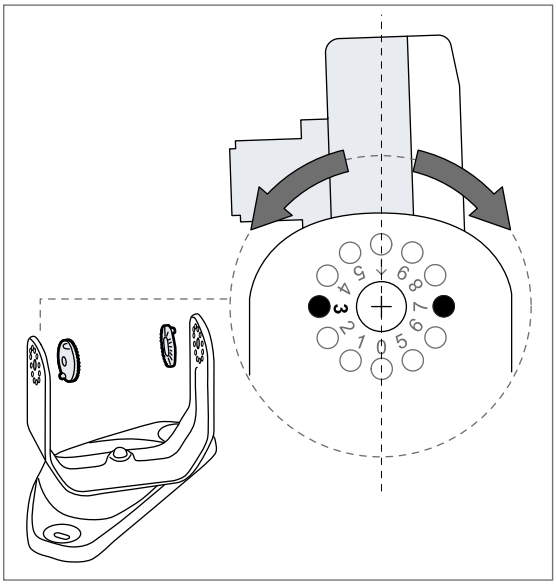

8. Tighten the screws.

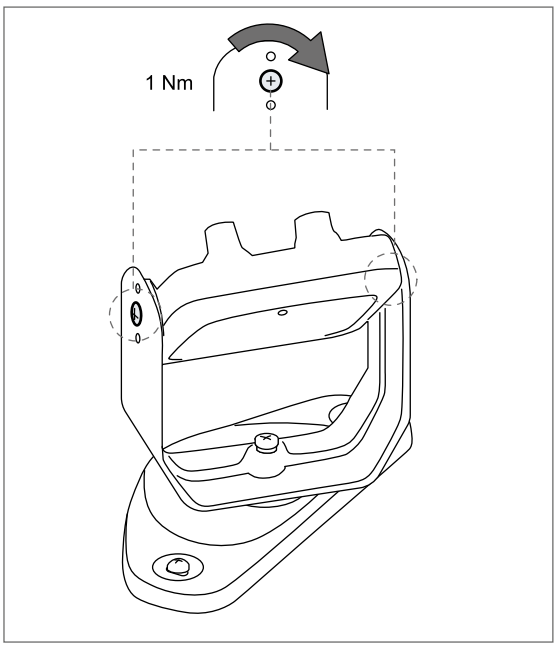

3.1.2.5 Examples of sensor installation

NOTICE: *refer to the sensor LED position to identify the sensor field of view.*

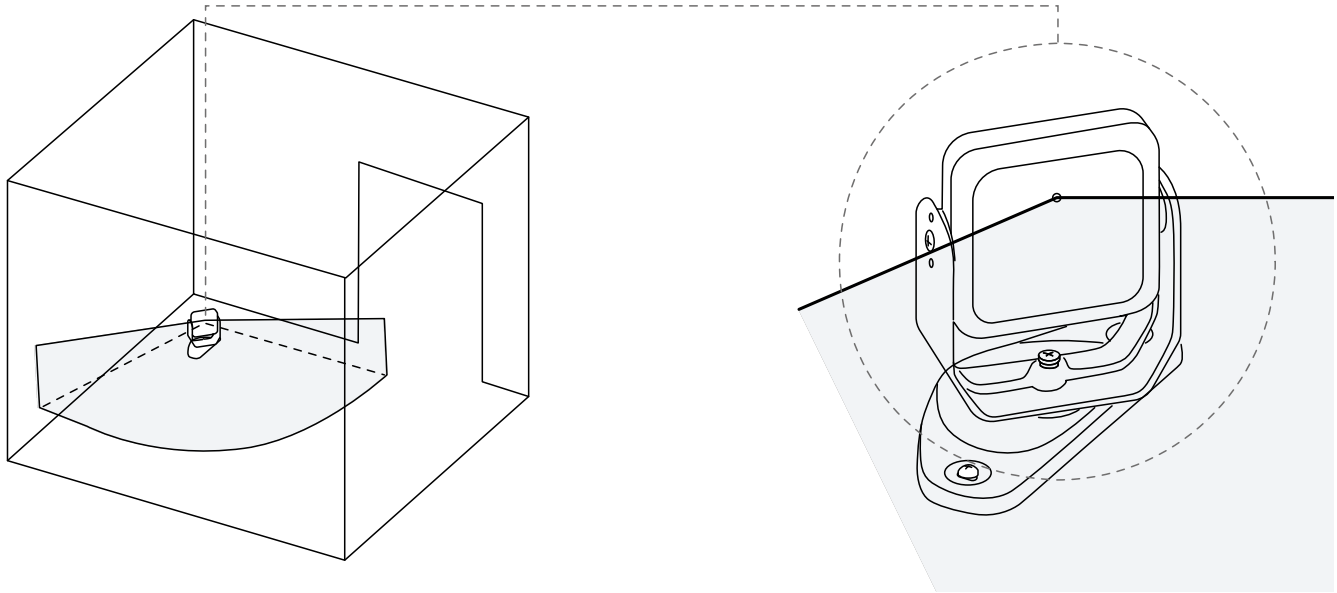

Floor installation

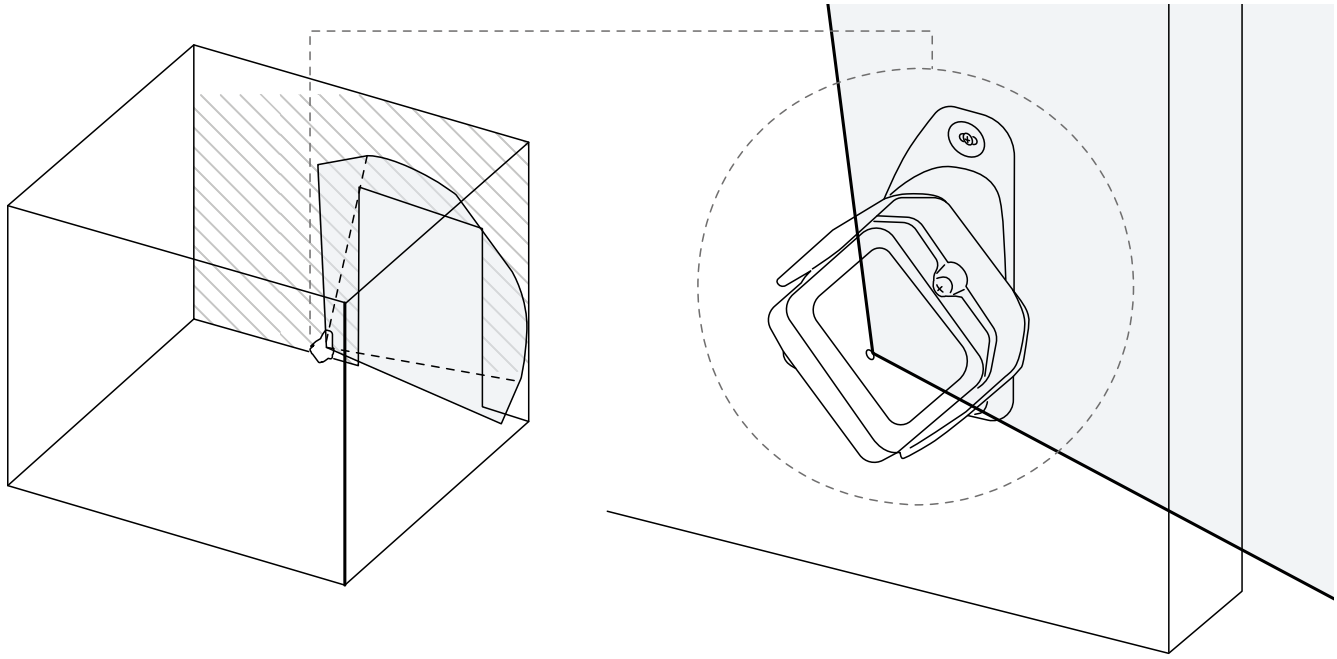

Wall installation (for example for access control of an entrance).

***Note**: install the sensor so that the field of view is tilted towards the outside of the hazardous area to avoid false alarms.*

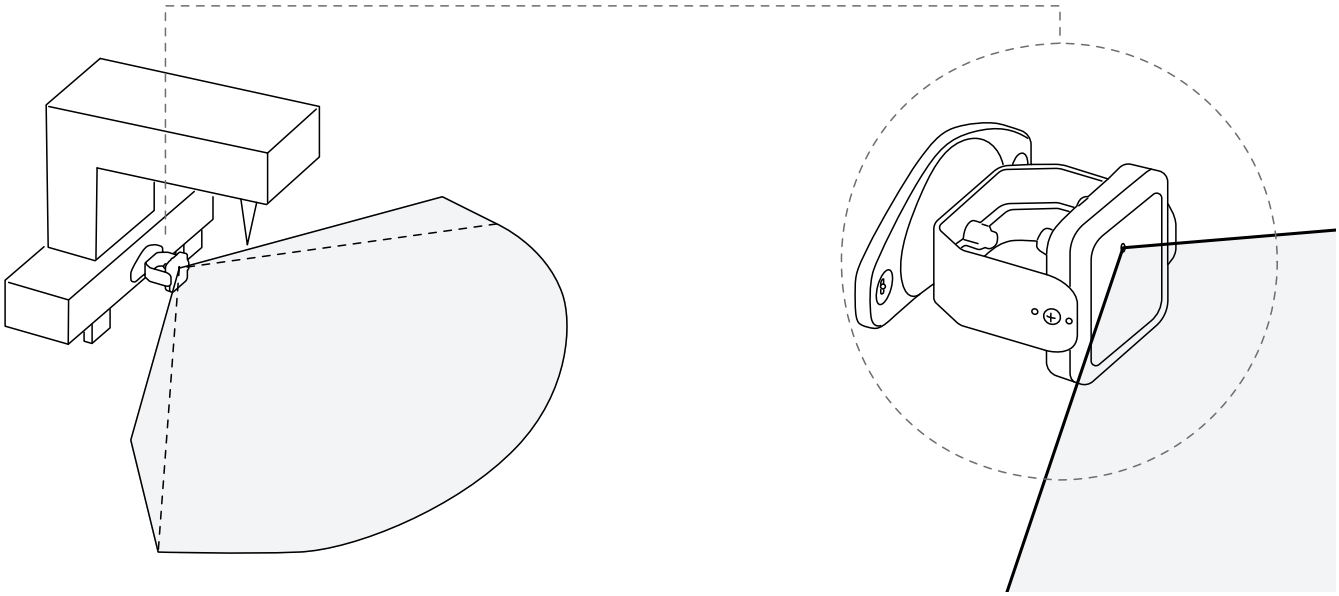

Installation on the machinery.

3.1.2.6 Connect the sensors to the control unit

***Note**: the length of the CAN bus line and the position of the control unit within the chain (at the end or in the middle) must be validated using the Cable validator tool (see "Chain examples" below).*

***Note**: when replacing a sensor, save the changes and send the configuration to the control unit in the system application to confirm the change.*

1. Set the DIP switch of the control unit based on its position in the chain.
2. Connect the desired sensor directly to the control unit.
3. To connect another sensor, connect it to the last sensor in the chain or directly to the control unit to start a second chain.
4. Repeat step 3 for all the sensors to be installed.
5. Insert the bus terminator (product code: 07000003) into the free connector of the last sensor of the chain(s).

3.1.2.7 Chain examples

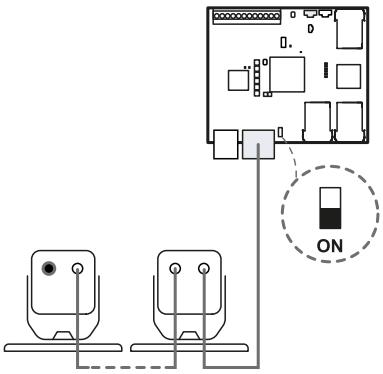

Chain with control unit at the end of the chain and a sensor with bus terminator

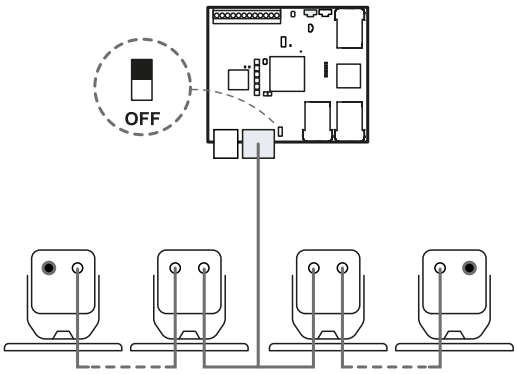

Chain with control unit inside the chain and two sensors with bus terminator

3.1.3 Set the sensor inclination with a 1° precision

3.1.3.1 Procedure

In the following procedure, the sensor inclination angle to be considered is the sensor angle relative to the default position of the 2-axis bracket, regardless of how the bracket is assembled or the sensor is installed.

1. Remove the tamper-proof screws and remove the sensor from the bracket.

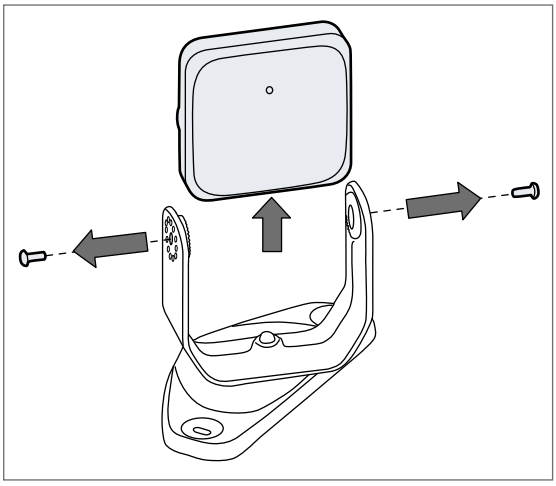

2. Remove the internal adjustment ring from the bracket.

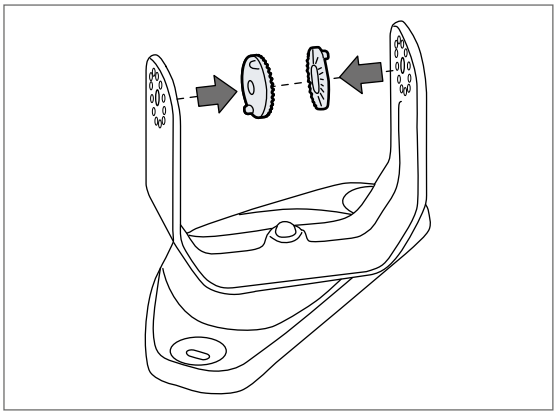

3. Reinsert the adjustment ring in the bracket holes according to the unit value of the desired inclination degrees (see "How to choose the adjustment ring position" on the next page).

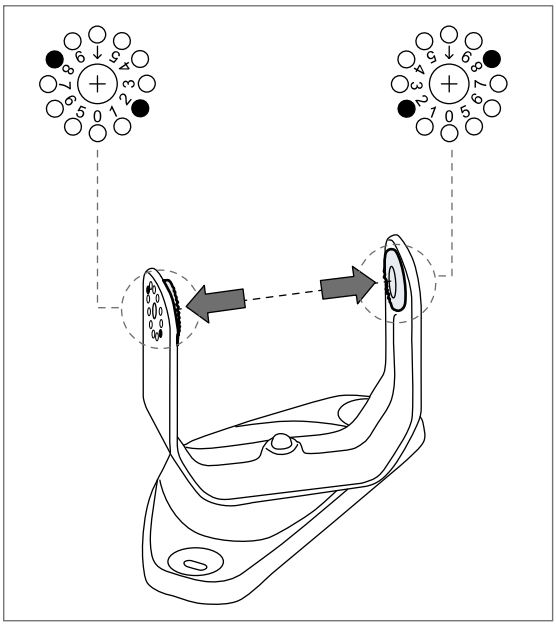

4. Insert the sensor and the tamper-proof screws in the bracket (see "How to insert the sensor" on the next page).

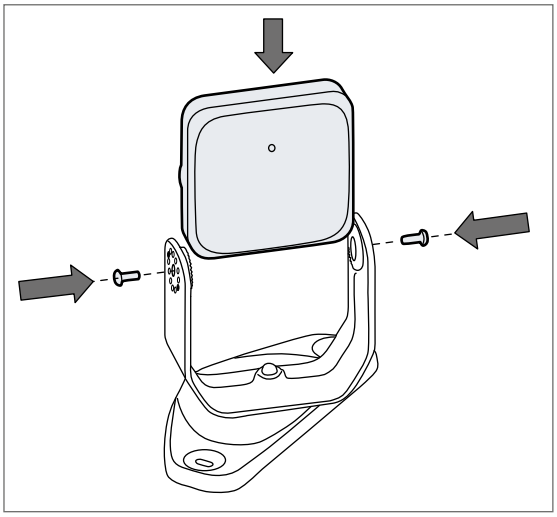

5. Tilt the sensor downward or upward the number of notches corresponding to the tens place value of the desired angle (for example, for an inclination angle of +38°, the tens place value is 3: tilt the sensor upward three notches).

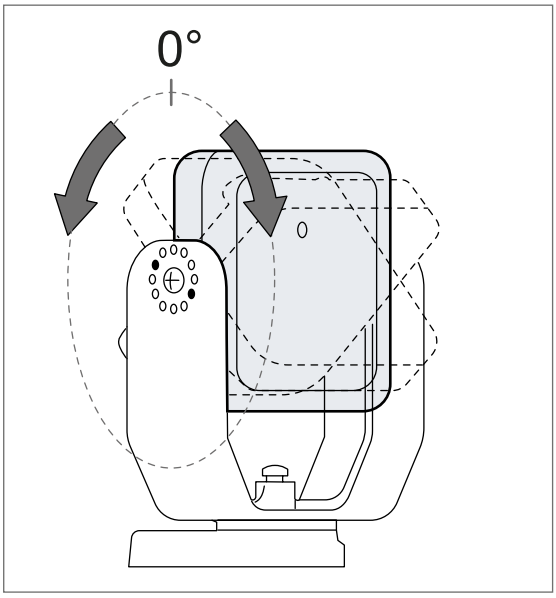

6. Tighten the screws.

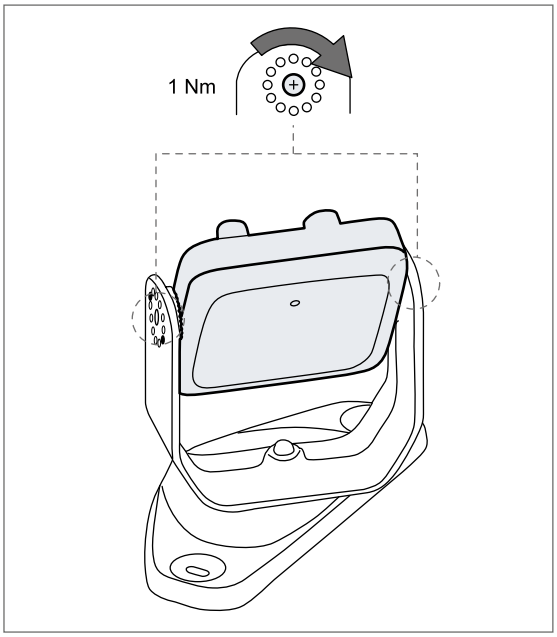

3.1.3.2 How to choose the adjustment ring position

On both sides of the bracket, insert the adjustment ring in the hole corresponding to the desired degree unit value (0-9°).

For example, for 8° (upward), +38° (upward) and -18° (downward) the unit value is always 8°:

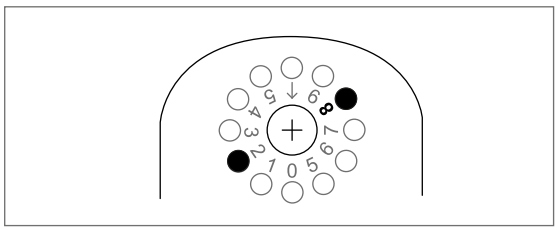

Side 1

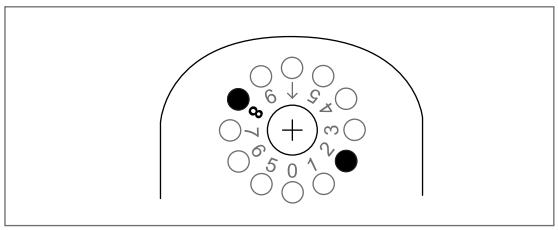

Side 2

3.1.3.3 How to insert the sensor

To insert the sensor in the bracket, take into account the following rules:

To tilt the sensor...	...then insert the sensor as follows	See
upward	with the **rear** of the case facing the desired angle	"Example 1 (upward): +62°" below
downward	with the **front** of the case facing the desired angle	"Example 2 (downward): -37°" on the next page

Example 1 (upward): +62°

In this example, the rear of the case is facing the following angles: 1°, **2°**, 3°, 4°, 5°.

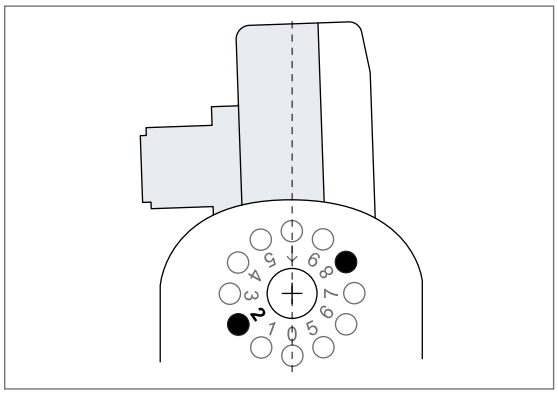

Side 1

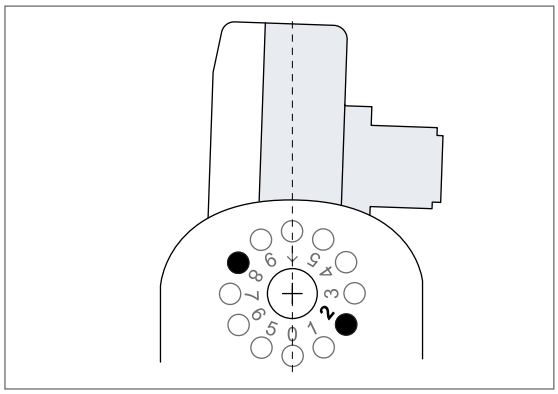

Side 2

Example 2 (downward): -37°

In this example, the front of the case is facing the following angles: 5°, 6°, **7°**, 8°, 9°.

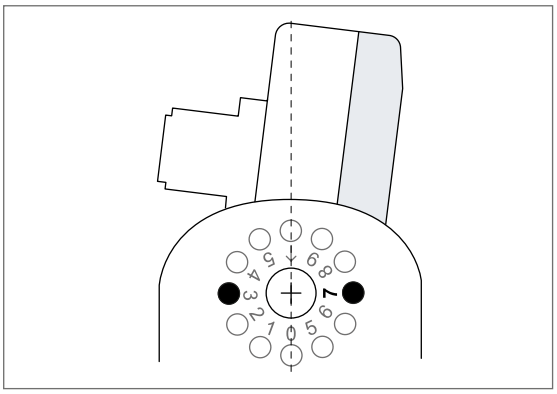

Side 1

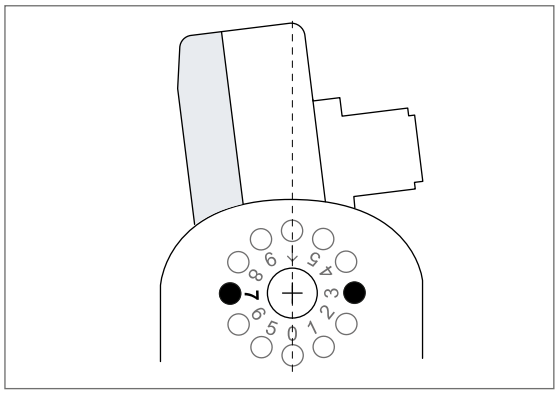

Side 2

3.1.3.4 Example: set the sensor inclination to +62°

1. Insert the adjustment ring in the hole corresponding to 2°.

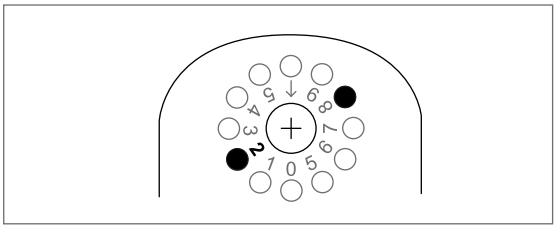

Side 1

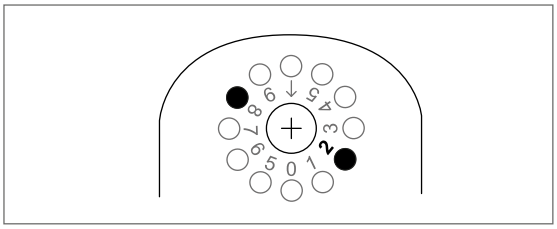

Side 2

2. Insert the sensor in the bracket with the rear of the sensor facing the 2° angle.

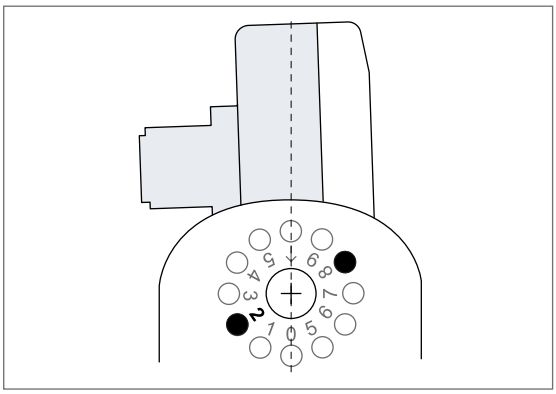

3. Tilt the sensor upward of six notches.

3.1.4 Configure Inxpect SRE 200 Series

3.1.4.1 Configure procedure

Procedure using Inxpect Safety

1. Connect the control unit to the computer using a USB data cable with a micro-USB connector or the Ethernet cable (if an Ethernet port is available).
2. Supply power to the control unit.
3. Start the application.
4. Define the area to be monitored.
5. Configure the inputs and outputs.

6. Optional. Synchronize the control units.
7. Save and print the configuration.

For more information about these steps, see "Configure the system" on page 81.

Procedure using Inxpect Safety Studio

1. Start the application.
2. Create a project and add 3D models and 2D models as desired.
3. Add and configure the control units.
4. Add and configure the sensors of each control unit.
5. Save the project.
6. Connect the control unit to the computer using a USB data cable with a micro-USB connector or the Ethernet cable (if an Ethernet port is available).
7. Supply power to the control unit.
8. Set the control unit connection parameters.
9. Pair the project sensors with the corresponding sensors physically connected to the control unit.
10. Send the configuration to the control unit.
11. Print the configuration.

For more information about these steps, see "Configure the system" on page 85.

3.1.5 Validate the safety functions

3.1.5.1 Validation

The validation is addressed to the machinery manufacturer and the system installer.

Once the system has been installed and configured, check that the safety functions are activated/deactivated as expected and that the dangerous area is monitored by the system.

The machinery manufacturer must define all the required tests based on the application conditions and the risk assessment.

WARNING! The system response time is not guaranteed during the validation procedure.

WARNING! The system application facilitates the installation and system configuration. Nevertheless, the validation process described below is still required to complete the installation.

3.1.5.2 Validation procedure for the access detection function

The access detection safety function must be operative, and the following requirements must be fulfilled:

- The target (for stationary applications) or the machinery/vehicle on which the sensor is installed (for mobile applications) must move in compliance with the maximum allowed speed. For details, see "Access detection speed limits" on page 28.
- No objects should completely occlude the target.

Starting conditions

- Machinery switched off (Safe condition)
- Inxpect SRE 200 Series configured to fulfill the access detection safety function
- Detection signals monitored via digital outputs or safety Fieldbus

Test setup

The following tests aim to validate the sensor’s performance for the access detection safety function.

In stationary applications, all the tests share these parameters:

Target type	Human
Target speed	In the range [0.1, 1.6] m/s ([0.33, 5.25] ft/s), with particular attention to the minimum and the maximum speeds.
Target direction	Any
Acceptance criteria	The system reaches the safe state via digital outputs or Fieldbus when the target accesses the area during the test.

In mobile applications, all the tests share these parameters:

Target type	Human
Machinery/Vehicle speed	See the access detection speed limit for mobile application of each sensor, reported in the "Main features" chapter in "Appendix A: sensor lines" on page 149.
Target movement	Stationary
Acceptance criteria	The system reaches the safe state via digital outputs or Fieldbus when, during the movement of the machinery/vehicle, the sensor's field of view reaches the target.

Validation test

The validation procedure of Inxpect SRE 200 Series is reported below:

1. Identify the test positions, including those locations where the operator could access during the production cycle:
    a. boundaries of the dangerous area
    b. intermediate points between sensors
    c. positions that are partially hidden by existing or presumed obstacles during the operating cycle
    d. positions indicated by the risk assessor
2. Check that the corresponding detection signal is active or wait for its activation.
3. Perform the test according to the test setup previously defined, moving toward one of the test positions.
4. Check that the test acceptance criteria previously defined are fulfilled. If the test acceptance criteria are not fulfilled, see "Troubleshooting validation" on page 78.
5. Repeat steps 2, 3, and 4 for each test position.

3.1.5.3 Validation procedure for the restart prevention function

The restart prevention safety function must be operative, and the following requirements must be fulfilled:

- The person must breathe normally.
- No objects should completely occlude the person.

Starting conditions

- Machinery switched off (safe condition)
- Inxpect SRE 200 Series configured to fulfill the restart prevention safety function
- Detection signals monitored via digital outputs or safety Fieldbus

Test setup

The following tests aim to validate the performance of the sensor restart prevention safety function.

All the tests share the following parameters:

Configured radar restart timeout	At least 4 s
Target type	Human according to ISO 7250, breathing normally
Target speed	0 m/s (0 ft/s)
Target pose	Standing or crouching (or other poses if requested by specific risk assessment)
Test duration	From 20 to 30 s
Acceptance criteria	The detection signal remains deactivated during the test. When the operator leaves the area; the detection signal is activated.

Validation test

The validation procedure of the Inxpect SRE 200 Series system is reported below:

1. Identify the test positions, including those locations where the operator should normally be located during the production cycle:
    - boundaries of the dangerous area
    - intermediate points between sensors
    - positions that are partially hidden by already present or presumed obstacles during the operating cycle
    - positions indicated by the risk assessor
2. Access the dangerous area and go to one of the test positions: the corresponding detection signal should be deactivated.
3. Perform the test according to the test setup previously defined.

4. Check that the test acceptance criteria previously defined are fulfilled.
5. If the test acceptance criteria are not fulfilled, see "Validate the system with the system application" on the next page.
6. Repeat steps 2, 3, and 4 for each test position.

Example of test positions

The following images show examples of positions to be tested and suggestions about identifying other possible positions of interest.

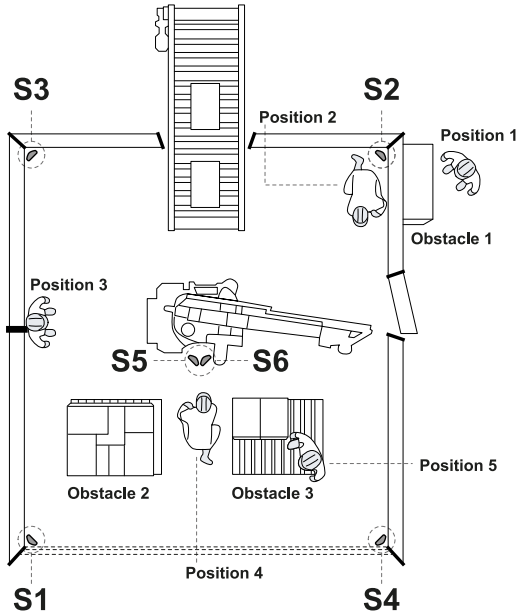

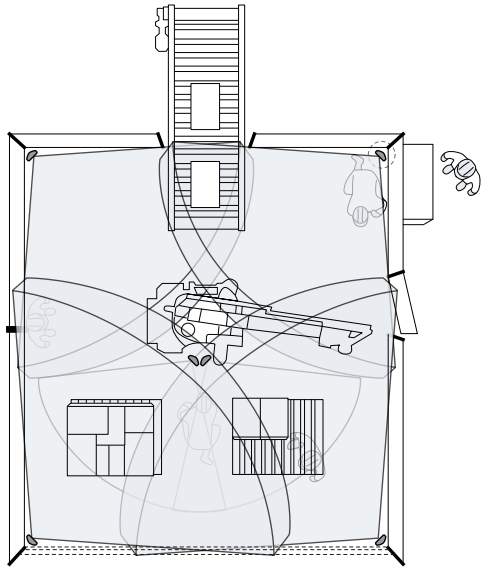

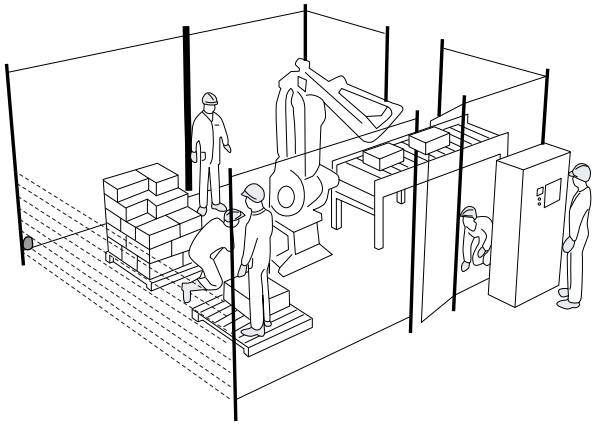

Position 1: position outside the dangerous area

Position 2: position hidden from the operator’s viewpoint at “Position 1”. Any other similar hidden position should be tested.

Position 3: position at the center distance between two sensors and/or close to the boundaries of the dangerous area (e.g., along safety fences). This position is suggested to verify that the detection fields of different sensors overlap without leaving uncovered areas. Standing close to the fences also allows for verifying that the sensors are rotated correctly, covering both the right and the left side.

Position 4: possible hidden position by elements in the environment that are present or not present during the validation process. Examples: Obstacle 2 precludes detection by Sensor 1 **(S1)**. Obstacle 3 is partially present during the Validation process but will likely be present during the normal operating cycle and will preclude the detection of Sensor 4 **(S4)**. This position must be covered by additional Sensor 5 **(S5)** and Sensor 6 **(S6)** that should be added within a proper feasibility study.

Position 5: any raised and walkable position indicated by the risk assessor.

Other positions can be indicated by the risk assessor or the machinery manufacturer.

3.1.5.4 Validate the system with the system application

WARNING! When the validation function is active, the system response time is not guaranteed.

The system application is helpful during the safety functions validation phase and allows the actual field of view of the sensors to be checked based on their installation position.

To validate the safety functions using Inxpect Safety, see "Validate the safety functions" on page 83.

To validate the safety functions using Inxpect Safety Studio, refer to Inxpect Safety Studio user manual.

3.1.5.5 Additional checks for safety Fieldbus

- Refer to the relevant documentation to integrate the Fieldbus properly, see "Fieldbus network integration" below.
- Check safety Fieldbus connection cables and make certain they function as intended.
- Check the safety Fieldbus settings in the configuration.
- Only for CIP Safety™: before entering the configuration signature into the configuration of the PLC of the machinery, check the configuration of the control unit.
- Only for CIP Safety™: check that the assigned SNN numbers for each safety or safety sub-net are unique system-wide.

3.1.5.6 Troubleshooting validation

Problem	Cause	Solution
The detection signal does not remain deactivated during the restart prevention test, or it does not deactivate during the access detection test	Presence of objects obstructing the field of view	If possible, remove the object. Otherwise, implement additional safety measures in the area where the object is present (e.g., adding new sensors).
	Position of one or more sensors	Position the sensors to ensure that the monitored area is adequate for the dangerous area (see "Applications" on page 50).
	Inclination and/or installation height of one or more sensors	1. Change the sensor’s inclination and/or installation height to ensure the monitored area is adequate for the dangerous area (see "Applications" on page 50). 2. Note or update the inclination and installation height of the sensors in the printed configuration report.
	Inadequate restart timeout (only with the static object detection option enabled)	Change the **Restart timeout** parameter via the system application and verify that it is set to at least 4 seconds for each sensor.
After that the operator leaves the area, the detection signal does not activate	Presence of moving objects in the sensor's field of view (including vibrations of metal parts where the sensors are installed or vibration of brackets)	Identify the moving objects/brackets and, if possible, tighten all the loose parts
	Reflections of signals	Change the sensor positions or adjust the detection fields reducing the detection distance

3.1.6 Fieldbus network integration

3.1.6.1 Integration procedure

The integration into the Fieldbus network may differ depending on the control unit model and type. Refer to the relevant additional manuals:

- C201A-PNS and C201B-P: PROFIsafe communication Reference guide (Inxpect 100S_200S PROFIsafe RG_7_00067_en)

- C201A-F and C201B-F: FSoE communication Reference guide (Inxpect 100S_200S FSoE RG_7_00237_en)
- C201B-C: CIP Safety communication Reference guide (Inxpect 100S_200S CIP RG_7_00326_en)

3.1.7 Other procedures

3.1.7.1 Restore factory default settings

WARNING! The system is provided without any valid configuration. Therefore, the system maintains the safe state at the first start-up until a valid configuration is sent to the control unit via the system application.

WARNING! The procedure resets both the configuration and the password of all the users.

Procedure using Inxpect Safety

1. Log in to the Inxpect Safety application as the Admin user.
2. In **Admin** > **FACTORY RESET**.

Procedure using the reset button on the control unit

1. Press and hold the button **[C]** for longer than 10 seconds: all the system status LEDs **[B]** turn on (steady orange), and the system is ready to be reset.
2. Release the button **[C]**: all the system status LEDs **[B]** turn on (flashing green), and the reset procedure starts. The procedure can last up to 30 seconds. Do not switch off the system during the reset.

***Note**: if the button is pressed for longer than 30 seconds, the status of the LEDs switches to red, and the reset is not performed even after the button is released.*

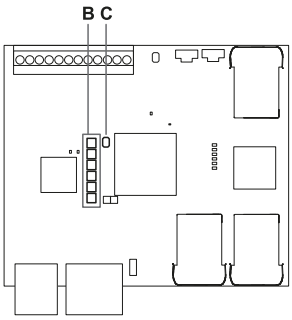

3.1.7.2 Reset the control unit Ethernet parameters

1. Ensure the control unit is turned on.
2. Press the Network parameter reset button and hold it down during steps 3 and 4.
3. Wait for five seconds.
4. Wait until all the six LEDs on the control unit turns steady green: the Ethernet parameters are set to their default values (see "Ethernet connection (if available)" on page 111).
5. Configure the control unit again.

3.1.7.3 Restore network parameters

WARNING! After the restore network parameters procedure, the system goes into the safe state. The configuration must be validated and, if necessary, modified via the system application. Then save and send the configuration to the control unit.

1. To restore the network parameters to the default settings, press and hold the reset button **[C]** on the control unit for 2 to 5 seconds: the first three system status LEDs **[B]** turn on (steady orange) and the network parameters are ready to be reset.
2. Release the button **[C]**: the reset is performed.

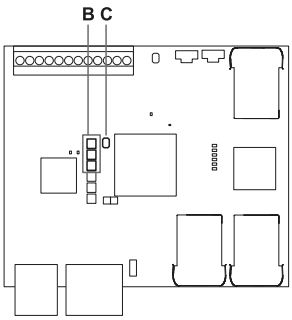

3.2 Use Inxpect Safety application

Contents

This section includes the following topics:

3.2.1 Get to know Inxpect Safety **80**
3.2.2 Configure the system **81**
3.2.3 Validate the safety functions **83**
3.2.4 Manage the configuration **83**

3.2.1 Get to know Inxpect Safety

3.2.1.1 Compatibility

The Inxpect Safety application can manage all sensors, except for the S202A sensors.

3.2.1.2 Main menu

Page	Function
Dashboard	Display main information on the configured system. ***Note**: the messages show the same information in the log files. For the meanings of the messages, see the chapters on logs in "Troubleshooting" on page 91.*
Configuration	Define the monitored area. Configure the sensors, their shape, and the detection fields. Define the dynamic configurations. Choose the safety working mode. Enable the static object detection option. Set the restart timeout.
Settings	Configure the sensor groups. Choose the detection fields dependency. Enable the anti-tampering functions. Synchronize more control units. Configure the inputs and outputs function. Perform the configuration backup and load a configuration. Download the log. Perform the sensor Node ID assignment. Set and perform the Teach-In function. Other general functions.

Page	Function
Admin	Configure and manage the users. Enable the SD Backup and the SD Restore. Perform a factory reset. Configure, show, and change the Network parameters (if available). Configure, show and change the MODBUS parameters (if available). Configure, show and change the Fieldbus parameters (if available). Set labels for control units and sensors.
Validation	Start the validation procedure. ***Note**: the messages shown on this page are those in the log file. To learn about the meaning of the messages, see the chapters on logs in "Troubleshooting" on page 91.*
REFRESH CONFIGURATION	Refresh configuration or ignore unsaved changes.
User	Change user profile. Modify account settings.
Control unit	Retrieve control unit information. Close the connection with the control unit and allow it to connect to another control unit.
	Change the language.

3.2.1.3 Inxpect Safety application usage

To use the application, the control unit must be connected to a computer with a data USB cable or, if the Ethernet port is available, an Ethernet cable. The USB cable allows to configure the system locally, whereas the Ethernet cable allows to do it remotely.

The Ethernet communication between the control unit and the Inxpect Safety application is secured by the most advanced security protocols (TLS).

3.2.2 Configure the system

3.2.2.1 Start Inxpect Safety application

1. Connect the control unit to the computer using a USB data cable with a micro-USB connector or the Ethernet cable (if an Ethernet port is available).
2. Supply power to the control unit.
3. Start the Inxpect Safety application.
4. Choose the connection mode (USB or Ethernet).
   ***Note**: the default IP address for the Ethernet connection is 192.168.0.20. The computer and the control unit must be connected to the same network.*
5. Set a new admin password, memorize it, and provide it only to authorized people.
6. Select the system Inxpect SRE 200 Series, the sensor model-type, and the number of sensors.
7. Optional. Reset and re-assign all Node IDs.
8. Set the country in which the system is installed.
   ***Note**: this setting does not have any effect on system performance or safety. The country selection is requested during the first installation of the system to configure the system's radio profile, which must comply with the national regulations of the installation country.*
9. Only if the selected country is **United States** or **Canada**, set the installation type in which the system is installed (**Indoor** or **Outdoor**).
10. Select the application type:
    - for stationary applications, select **Stationary**.
    - for installation on machinery with a moving gantry, on a truck on rails, or on a crane, select **Mobile**.
    - for both automated guided vehicles and vehicles with driver, select **Vehicle**.
      ***Note**: the algorithms are optimized to minimize the interference between sensors based on the installation conditions. Even though this choice does not affect the performance and the robustness, it is mandatory to select the correct application type.*

3.2.2.2 Define the area to be monitored

WARNING! The system is disabled during configuration. Prepare opportune safety measures in the dangerous area protected by the system before configuring the system.

1. In the Inxpect Safety application click **Configuration**.
2. Optional. Add the desired number of sensors in the plane.
3. Define the position and inclination of each sensor.

   WARNING! Set the values of those parameters accurately because the system behavior is optimized following those values.

4. Choose the area shape (only Pro line and Omni line sensors).
5. Define the safety working mode, detection distance, angular coverage, and restart timeout for each detection field of each sensor.
6. Optional. Enable the **Static object detection** option for each detection field only if needed. For details, see "Restart prevention function: static object detection option" on page 39.

3.2.2.3 Configure the inputs and outputs

1. In the Inxpect Safety application, click **Settings**.
2. Click **Digital Input-Output** and define the input and output functions.
3. If the muting is managed, click **Settings** > **Muting** and assign the sensors to the groups according to the logic of the digital inputs.
4. If needed, in **Settings** > **Restart function** select the type of managed restart.
5. Click **APPLY CHANGES** to save the configuration.

3.2.2.4 Save and print the configuration

1. In the application, click **APPLY CHANGES**: the sensors will save the inclination set and the surrounding environment. The application will transfer the configuration to the control unit, and once transfer is complete it will generate a configuration report.
2. Click to save and print the report.
   ***Note**: to save the PDF, a printer must be installed on the computer.*
3. Ask the authorized person for a signature.

3.2.2.5 Re-assign the Node IDs

Type of assignment

***Note**: if the connected sensors do not already have a Node ID assigned (e.g., at first startup), the system automatically assigns them a Node ID during the installation procedure.*

Three types of assignment are possible:

- Manual: to assign the Node ID to a sensor at a time. Can be performed with all the sensors already connected or after each connection. Useful for adding a sensor or to change Node ID to a sensor.
- Automatic: to assign the Node IDs to all the sensors at once. To be performed when all the sensors are connected.
  ***Note**: the control unit assigns the Node ID in ascending order of sensor ID (SID).*
- Semi-automatic: wizard for connecting the sensors and assign the Node ID one sensor at a time.

Procedure

1. Start the application.
2. Click **Configuration** and verify that the number of sensors in the configuration is the same as those installed.

3. Click **Settings** > **Node ID Assignment**.
4. Proceed according to the type of assignment:

If the assignment is...	Then...
manual	1. Click **DISCOVER CONNECTED SENSORS** to display the connected sensors. 2. To assign a Node ID, click **Assign** for the unassigned Node ID in the **Configured sensors** list. 3. To change a Node ID, click **Change** for the already assigned Node ID in the **Configured sensors** list. 4. Select the SID of the sensor and confirm.
automatic	1. Click **DISCOVER CONNECTED SENSORS** to display the connected sensors. 2. Click **ASSIGN NODE IDS** > **Automatic**: the control unit assigns the Node ID in ascending order of sensor ID (SID).
semi-automatic	Click **ASSIGN NODE IDS** > **Semi-automatic** and follow the instructions displayed.

3.2.2.6 Synchronize the control units

If there is more than one control unit in the area, perform the following steps:

1. In the Inxpect Safety application, click **Settings** > **Advanced**.
2. In **Multi-control unit synchronization**, assign a different **Control unit channel** to each control unit.

***Note**: if there are more than four control units, the control units with the same channel must have their monitored areas as far from each other as possible.*

3.2.3 Validate the safety functions

3.2.3.1 Procedure

WARNING! When the validation function is active, the system response time is not guaranteed.

The Inxpect Safety application is helpful during the safety functions validation phase and allows the actual field of view of the sensors to be checked based on their installation position.

1. Click **Validation**: the validation starts automatically.
2. Move in the monitored area as indicated in "Validation test" on page 76 and "Validation procedure for the restart prevention function" on page 76.
3. Check that the sensor behaves as expected.
   ***Note**: if the static object detection option is enabled, the empty dot represents a moving target, and the full dot represents a static target.*
4. Check that the distance and the angle* where the motion is detected are the expected values.
   Note: see "Target position angle conventions" on page 134.*

3.2.4 Manage the configuration

3.2.4.1 Configuration checksums

In the Inxpect Safety application in **Settings** > **Configuration checksums**, it is possible to consult:

- the configuration report hash, a unique alphanumeric code associated with a report. It is computed considering the entire configuration, plus the time of the configuration saving and uploading, and the name of the computer that did it
- dynamic configuration checksum, associated with a specific dynamic configuration. It considers both common and dynamic parameters

3.2.4.2 Configuration reports

After changing the configuration, the system generates a configuration report with the following information:

- configuration data
- unique hash
- date and time of configuration change
- name of the computer used for the configuration

The reports are documents that cannot be changed and can only be printed and signed by the machinery safety manager.

***Note**: to save the PDF, a printer must be installed on the computer.*

3.2.4.3 Change the configuration

WARNING! The system is disabled during configuration. Prepare opportune safety measures in the dangerous area protected by the system before configuring the system.

1. Start the Inxpect Safety application.
2. Click **User** and enter the admin password.
   ***Note**: after five wrong password entries, application authentication is blocked for one minute.*
3. Depending on what you want to change, follow the instructions below:

To change...	Then...
Monitored area and sensors configuration	Click **Configuration**
Node ID	Click **Settings** > **Node ID Assignment**
Function of inputs and outputs	Click **Settings** > **Digital Input-Output**
Detection field groups configuration	Click **Settings** > **Detection field groups** and select the group for each detection field of each connected sensor. Then click **Settings** > **Digital Input-Output** and set a digital output as **Detection signal group 1** or **Detection signal group 2** function
Muting	Click **Settings** > **Muting**
Sensor number and positioning	Click **Configuration**

4. Click **APPLY CHANGES**.
5. Upon conclusion of transfer of the configuration to the control unit, click to print the report.
   ***Note**: to save the PDF, a printer must be installed on the computer.*

3.2.4.4 Display the configuration archive

In **Settings**, click **Activity History** and then click **Configuration reports page**: the reports archive opens.

3.3 Use Inxpect Safety Studio application

Contents

This section includes the following topics:

3.3.1 Get to know Inxpect Safety Studio **85**
3.3.2 Configure the system **85**
3.3.3 Manage the configuration **85**

3.3.1 Get to know Inxpect Safety Studio

3.3.1.1 Compatibility

The Inxpect Safety Studio application can manage the following components:

- control units: only eXtended Line
- sensors: all, except for S201A

3.3.2 Configure the system

3.3.2.1 Create and configure the system project

Refer to Inxpect Safety Studio user manual.

3.3.2.2 Pair the sensors

This procedure is only possible if the control unit is connected to the computer.

1. In DESIGN (in the control unit card) click ··· > **Sensors pairing**: the application scans all sensors connected to the control unit. When the scan is complete, a matrix is displayed with the connected and configured sensors.
2. To pair the configured sensor with the corresponding connected sensor, select the relevant check-box.
3. To physically recognize a connected sensor, click **Blink sensor LED** to make the sensor LED blink.
4. Click **CONFIRM**: each sensor is assigned a node ID.

3.3.2.3 Send and print the configuration

This procedure is only possible if the control unit is connected to the computer.

1. Pair the project sensors with the corresponding sensors physically connected to the control unit. See "Pair the sensors" above.
2. Upload the configuration as follows:

To send the configuration to...	Then...
a single control unit	in the control unit card, click ··· > **Upload configuration** or click ⬆.
all control units added to the project	in the **DESIGN** section, click **UPLOAD**.

   The sensors paired with the control unit will save the surrounding environment as the reference for anti-tampering functions.

3. Save the report generated at the end of the uploading process.
4. Ask the authorized person for a signature.

3.3.2.4 Synchronize the control units

If there is more than one control unit in the area, perform the following steps:

In DESIGN > control unit card > OTHER OPTIONS, in MULTI-CONTROL UNIT SYNCHRONIZATION, assign a different **Control unit channel** to each control unit.

***Note**: if there are more than four control units, the control units with the same channel must have their monitored areas as far from each other as possible.*

3.3.3 Manage the configuration

3.3.3.1 Configuration checksums

In **DESIGN** > control unit card > **Device info**, it is possible to consult:

- the configuration report hash, a unique alphanumeric code associated with a report. It is computed considering the entire configuration, plus the time of the configuration saving and uploading, and the name of the computer that did it
- dynamic configuration checksum, associated with a specific dynamic configuration. It considers both common and dynamic parameters

3.3.3.2 Configuration reports

After changing the configuration, the system generates a configuration report with the following information:

- configuration data
- unique hash
- date and time of configuration change
- name of the computer used for the configuration

The reports are documents that cannot be changed and can only be printed and signed by the machinery safety manager.

***Note**: to save the PDF, a printer must be installed on the computer.*

3.3.3.3 Change the configuration

WARNING! The system is disabled during configuration. Prepare opportune safety measures in the dangerous area protected by the system before configuring the system.

To change the configuration with Inxpect Safety Studio, refer to Inxpect Safety Studio user manual.

3.3.3.4 Display the configuration archive

Click **REPORT**: the reports archive opens.

4. Maintenance and troubleshooting

4.1 LEDs

Contents

This section includes the following topics:

4.1.1 Control unit status LEDs **87**
4.1.2 Control unit Fieldbus LEDs **88**
4.1.3 Sensor status LEDs **91**

4.1.1 Control unit status LEDs

4.1.1.1 System status LEDs

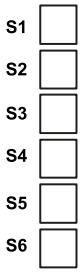

4.1.1.2 Meaning in the normal and safe state (detection state)

The LEDs are each dedicated to a sensor, and can display the following statuses:

Status	Meaning
Steady green	Normal sensor function and no motion detected
Orange	Normal sensor function and some motion detected
Flashing red	Sensor in error (see "Sensor LED" on page 94)
Steady red	System error (see "Control unit LED" on page 92)
Flashing green	Sensor in boot status (see "Control unit LED" on page 92)

4.1.1.3 Meaning in the safe state (fault, stop signal, and configuration states)

See "Control unit LED" on page 92.

4.1.2 Control unit Fieldbus LEDs

4.1.2.1 PROFIsafe Fieldbus status LEDs

The LEDs reflect the status of the PROFIsafe Fieldbus, and their meanings are reported below.

LEDs

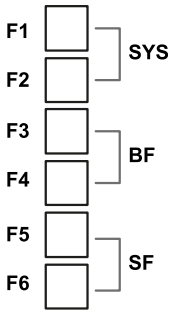

LEDs	Type	Description
F1	SYS	System status
F2		
F3	BF	Bus failure
F4		
F5	SF	System failure
F6		

Meaning of SYS LEDs

F1 status	F2 status	Meaning
Steady green	Off	Normal behavior
Flashing green	Off	Contact technical support
Off	Flashing yellow	Contact technical support
Off	Steady yellow	Contact technical support
Off	Off	Contact technical support

Meaning of BF LEDs

F3 status	F4 status	Meaning
Off	Off (not used)	Data exchange is running with the host
Flashing red	Off (not used)	No data exchange
Steady red	Off (not used)	No physical link

Meaning of SF LEDs

F5 status	F6 status	Meaning
Off	Off (not used)	Normal behavior
Steady red	Off (not used)	Diagnostic error at the PROFIsafe layer (wrong F Dest Address, watchdog timeout, or wrong CRC) or at the PROFINET layer (watchdog timeout, channel, generic or extended diagnosis present, or system error)
Flashing red	Off (not used)	DCP signal service is initiated via the bus

4.1.2.2 FSoE Fieldbus status LEDs

The LEDs reflect the status of the FSoE Fieldbus, and their meanings are reported below.

LEDs

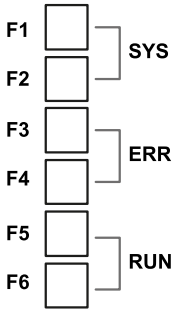

LEDs	Type	Description
F1	SYS	System status
F2		
F3	ERR	Error code
F4		
F5	RUN	Current state of the State Machinery
F6		

Meaning of SYS LEDs

F1 status	F2 status	Meaning
Steady green	Off	Normal behavior
Flashing green	Off	Contact technical support
Off	Flashing yellow	Contact technical support
Off	Steady yellow	Contact technical support
Off	Off	Contact technical support

Meaning of ERR LEDs

F3 status	F4 status	Meaning
Off	Off (not used)	Normal behavior
Flashing red	Off (not used)	Invalid configuration: General Configuration Error. Possible reason: State change commanded by master is impossible due to register or object settings
Single flash red	Off (not used)	Local error: Slave device application has changed the EtherCAT state autonomously. Possible reason 1: A host watchdog timeout has occurred. Possible reason 2: Synchronization error, the device enters Safe-Operational state automatically
Double flash red	Off (not used)	Application watchdog timeout. Possible reason: Sync Manager Watchdog timeout

Meaning of RUN LEDs

F5 status	F6 status	Meaning
Off (not used)	Off	INIT state
Off (not used)	Steady green	OPERATIONAL state
Off (not used)	Single flash green	SAFE-OPERATIONAL state
Off (not used)	Flashing green	SAFE-OPERATIONAL state

4.1.2.3 CIP Safety™ status LEDs

The LEDs reflect the status of the CIP Safety Fieldbus, and their meanings are reported below.

WARNING! CIP Safety status LEDs are NOT reliable indicators and cannot be guaranteed to provide accurate information. They should ONLY be used for general diagnostics during commissioning or troubleshooting. Do not attempt to use LEDs as operational indicators.

LEDs

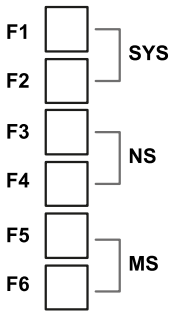

LEDs	Type	Description
F1	SYS	System status
F2		
F3	NS	Network Status
F4		
F5	MS	Module Status
F6		

Meaning of SYS LEDs

F1 status	F2 status	Meaning
Steady green	Off	Normal behavior
Flashing green	Off	Contact technical support
Off	Flashing yellow	Contact technical support
Off	Steady yellow	Contact technical support
Off	Off	Contact technical support

Meaning of NS LEDs

F3 status	F4 status	Meaning
Steady red	Off	Duplicate IP address
Flashing red	Off	Connection timeout: an IP address is configured, and an Exclusive Owner connection for which this device is the target has timed out
Off	Steady green	Connected: an IP address is configured, at least one CIP connection is established, and an Exclusive Owner connection has not timed out
Off	Flashing green	No CIP connections
Flashing red	Flashing green	[Sequence F4-F3-Off] Self-test: the device is performing its power-up testing
Off	Off	Not powered or no IP address

Meaning of MS LEDs

F5 status	F6 status	Meaning
Steady red	Off	Major unrecoverable fault
Flashing red	Off	Major recoverable fault, e.g., an incorrect or inconsistent configuration
Off	Steady green	The device is operating correctly
Off	Flashing green	Standby: the device has not been configured
Flashing red	Flashing green	[Sequence F6-F5-Off] Self-test: the device is performing its power-up testing. The MS indicator test sequence occurs before the NS indicator test sequence
Off	Off	Not powered

4.1.3 Sensor status LEDs

4.1.3.1 Meaning in the normal and safe state (detection state)

Status	Meaning
Steady blue	Sensor is working. No motion detected.
Flashing blue	Sensor is detecting motion*. Not available if the sensor is in muting. Only for S202A sensors, for the restart prevention function, the LED keeps flashing for about 2 seconds after the end of a detection
Purple	Firmware update conditions (see "Sensor LED" on page 94)
Red	Error conditions (see "Sensor LED" on page 94)

Note*: the detection signal overrides the masking signal if they are present at the same time. Only for S202A sensors, the masking signal overrides the detection signal.*

4.1.3.2 Meaning in the safe state (fault, stop signal, and configuration states)

See "Sensor LED" on page 94.

4.2 Troubleshooting

Machinery maintenance technician

The machinery maintenance technician is a qualified person with the administrator privileges required to modify the configuration of Inxpect SRE 200 Series through the software and perform maintenance and troubleshooting.

Contents

This section includes the following topics:

4.2.1 Troubleshooting procedures **91**
4.2.2 Event log management **95**
4.2.3 INFO events **99**
4.2.4 ERROR events (control unit) **102**
4.2.5 ERROR events (sensor) **104**
4.2.6 ERROR events (CAN bus) **106**
4.2.7 Auto-resume **106**

4.2.1 Troubleshooting procedures

4.2.1.1 Download sensor debug info

If requested by Technical Support, download the sensor debug info files and forward them to Inxpect for debugging (in Inxpect Safety: **Settings** > **Activity History** > **Download sensor debug info**).

4.2.1.2 Control unit LED

For more details about the LEDs in the control unit, see "Control units" on page 19 and "Control units" on page 19.

LED	Status	Application messages	Problem	Solution
S1*	Steady red	CONTROL UNIT POWER ERROR	At least one voltage value on the control unit is wrong	If at least one digital input is connected, check that the SNS input and the GND input are connected. Check that the input power supply is the specified type (see "General specifications" on page 111).
S1 + S3	Steady red	BACKUP or RESTORE ERROR	Error during the backup and restore to/from microSD card	Check if the microSD card is inserted. Check if the configuration file on the microSD card is present and not corrupted.
S2	Steady red	CONTROL UNIT TEMPERATURE ERROR	Control unit temperature value is wrong	Check that the system is operating at the correct operating temperature (see "General specifications" on page 111).
S3	Steady red	OSSD ERROR or INPUT ERROR	At least one input or output is in error	If at least one input is used, check that both the channels are connected and that there is no short-circuit on the outputs. If the problem persists, please contact Technical Support.
S4	Steady red	PERIPHERAL ERROR	At least one of the control unit peripherals is in error	Check the status of the terminal block and connections. If the problem persists, please contact Technical Support.
S5	Steady red	CAN ERROR	Communication error with at least one sensor	Check connections of all sensors in the chain starting from the last sensor in error. Check that all the sensors have an assigned ID(for Inxpect Safety, see "Reassign the Node IDs" on page 82; for Inxpect Safety Studio, see "Pair the sensors" on page 85). Check that the firmware of the control unit and sensors are updated to the compatible versions.
S6	Steady red	FEE ERROR, FLASH ERROR or RAM ERROR	Configuration saving error, configuration not performed or memory error	Reconfigure or configure the system (see "Manage the configuration" on page 83). If the error persists, please contact Technical Support.

LED	Status	Application messages	Problem	Solution
All LEDs from S1 to S6 together	Steady red	FIELDBUS ERROR	Communication error on the Fieldbus	At least one input or output is configured as **Fieldbus controlled**. Check that the cable is correctly connected, communication with the host is correctly established, watchdog timeout is configured correctly, and exchanged data are not maintained passivated.
All LEDs from S1 to S5 together	Steady red	DYNAMIC CONFIGURATION ERROR	Error in the selection of the dynamic configuration: invalid ID	Check the preset configurations within the system application.
All LEDs from S1 to S4 together	Steady red	SENSOR CONFIGURATION ERROR	Error during the configuration of the sensors	Check the sensors connected and try configuring the system again via the system application. Check that the firmware of the control unit and sensors are updated to the compatible versions.
At least one LED	Flashing red	See "Sensor LED" on the next page	Sensor corresponding to the flashing LED in error ** (see"Sensor LED" on the next page)	Check the problem through the LED on the sensor.
At least one LED	Flashing green	See "Sensor LED" on the next page	Sensor corresponding to the flashing LED in error ** (see"Sensor LED" on the next page)	If the issue persists longer than one minute, please contact Technical Support.
All LEDs	Steady orange	-	The system is starting up.	Wait for a few seconds.
All LEDs	Flashing green one after the other in sequence	-	The control unit is in boot state.	Open the latest version of the system application available, connect to the device, and proceed with the automatic recovery procedure. If the issue persists, please contact Technical Support.
All LEDs	Off	In Inxpect Safety: **Dashboard** > **System status** icons In Inxpect Safety Studio: **Validation** > control unit status and message "The project has not been uploaded"	Configuration not yet applied to the control unit.	Configure the system.
All LEDs	Off	Progress icon	Configuration transfer to the control unit in progress.	Wait for the transfer to be completed.

***Note**: fault signal on the control unit (steady LED) takes priority over a faulty sensor signal. For the status of the single sensor, check the sensor LED.*

Note*: S1 is the first from the top.*

Note**: S1 corresponds to the sensor with ID 1, S2 corresponds to the sensor with ID 2 and so on.*

4.2.1.3 Sensor LED

Status	Application messages	Problem	Solution
Steady purple	-	Sensor in boot state	Contact Technical Support.
Flashing purple *	-	Sensor receiving a firmware update	Wait for the update to be completed without disconnecting the sensor.
Flashing red. Two flashes followed by a pause **	CAN ERROR	Sensor without a valid identifier assigned	Assign a Node ID to the sensor (see "Connect the sensors to the control unit" on page 70).
Flashing red. Three flashes followed by a pause **	CAN ERROR	Sensor does not receive valid messages from the control unit	Verify the connection of all the sensors in the chain and check that the number of sensors configured in the system application is equal to the number of sensors physically connected
Flashing red. Four flashes followed by a pause **	SENSORTEMPERATURE ERROR or SENSORPOWER ERROR	Sensor in temperature error or is receiving an incorrect supply voltage	Check the sensor connection and that the cable length is within the maximum limits. Verify that the temperature of the environment in which the system is operating conforms to the operating temperatures listed in the technical data in this manual.
Flashing red. Five flashes followed by a pause **	MASKING, SIGNAL PATTERN ERROR***	Sensor detected a masking (tampering) or there are radar signal errors	Not available if the sensor is in muting. Check that the sensor is installed correctly and that the area is clear of objects that obstruct the sensor's field of view.
	MASKING REFERENCE MISSING	Sensor is not able to save the monitored area reference for occlusion	Repeat the system configuration making sure no movement is present inside the monitored area
	MSS ERROR/DSS ERROR	Error detected by diagnostics relative to the internal micro-controllers (MSS and DSS), their internal peripherals or memories	If the issue persists, please contact Technical Support.
Flashing red. Six flashes followed by a pause **	TAMPER ERROR	Sensor detected a variation in rotation around the axes (tampering)	Not available if the sensor is in muting. Check if the sensor has been tampered with or if the side or mounting screws have loosened.

Note *: flashes at 100 ms intervals without pause*

Note ***: flashes at 200 ms intervals and then with a 2 s pause.*

Note**: the detection signal overrides the masking signal if they are present at the same time. Only for S202A sensors, the masking signal overrides the detection signal.*

4.2.1.4 Other problems

Problem	Cause	Solution
Undesired detections	Transit of people or objects in close proximity to the detection field	Change the configuration (see "Change the configuration" on page 84).
Machinery in safe status without motion in the detection field	No power supply	Check electrical connection. Contact Technical Support if necessary.
	Failure of the control unit or one or more sensors	Check the status of the LEDs on the control unit (see "Control unit LED" on page 92). In Inxpect Safety: **Dashboard** > mouse-over ⊗ at the control unit or the sensor; in Inxpect Safety Studio: **VALIDATION**.
The voltage value detected on the SNS input is zero	The chip that detects inputs is faulty	Contact Technical Support.
The system does not function correctly	Control unit error	Check the status of the LEDs on the control unit (see "Control unit LED" on page 92). In Inxpect Safety: **Dashboard** > mouse-over ⊗ at the control unit or the sensor; in Inxpect Safety Studio: **VALIDATION**.
	Sensor error	Check the status of the LEDs on the sensor (see "Sensor LED" on the previous page). In Inxpect Safety: **Dashboard** > mouse-over ⊗ at the control unit or the sensor; in Inxpect Safety Studio: **VALIDATION**.

4.2.2 Event log management

4.2.2.1 Introduction

The event log recorded by the system can be downloaded from the system application in a PDF file. The system saves up to 4500 events, divided into two sections. In each section the events are displayed from the most recent to the least recent. Above this limit, the oldest events are overwritten.

4.2.2.2 Download the system log

WARNING! The system response time is not guaranteed while downloading the log file.

Procedure using Inxpect Safety

1. Start the Inxpect Safety application.
2. Click **Settings** and then **Activity History**.
3. Click **DOWNLOAD LOG**.
   ***Note**: to save the PDF, a printer must be installed on the computer.*

Procedure using Inxpect Safety Studio

1. Start the Inxpect Safety Studio application.
2. In **DESIGN** > control unit card, click **ACTIVITY HISTORY**.
3. In **System log**, click **DOWNLOAD**.
   ***Note**: to save the PDF, a printer must be installed on the computer.*

4.2.2.3 Log file sections

The first line of the file reports the NID (Network ID) of the device and the date of the download.

The rest of the file log is divided in two sections:

Section	Description	Content	Size	Reset
1	Event log	Information events Error events	3500	At every firmware update or on-demand using the system application
2	Diagnostic event log	Error events	1000	Not possible

4.2.2.4 Log line structure

Each line in the log file reports the following information, separated by tab character:

- Timestamp (seconds counter from the latest boot)
- Timestamp (absolute/relative value)
- Event type:
  - [ERROR] = diagnostic event
  - [INFO] = information event
- Source
  - CONTROL UNIT = if the event is generated by the control unit
  - SENSOR ID = if the event is generated by a sensor. In this case, the Node ID of the sensor is also provided
- Event description

4.2.2.5 Timestamp (seconds counter from the latest boot)

An indication of the instant when the event occurred is provided as relative time from the latest boot, in seconds.

Example: 92

Meaning: the event occurred 92 seconds after the latest boot

4.2.2.6 Timestamp (absolute/relative value)

An indication of the instant when the event occurred is provided.

- After a new system configuration, it is provided as absolute time.

  Format: *YYYY/MM/DD hh:mm:ss*

  Example: 2024/08/08 23:58:00

- After a reboot of the device, it is provided as relative time from the latest boot.

  Format: *Rel. x d hh:mm:ss*

  Example: Rel. 0 d 00:01:32

***Note**: when a new system configuration is performed, even the older timestamps are updated in absolute time format.*

***Note**: during system configuration, the control unit receives the local time of the machinery where the software is running.*

4.2.2.7 Event description

A complete description of the event is reported. Whenever possible, depending on the event, additional parameters are reported.

In case of a diagnostic event, an internal error code is also added, useful for the purpose of debug. If the diagnostic event disappears, the label “(Disappearing)” is reported as an additional parameter.

Examples

Detection access (field #3, 1300 mm/40°)

System configuration #15

CAN ERROR (Code: 0x0010) COMMUNICATION LOST

CAN ERROR (Disappearing)

4.2.2.8 Log file example

Event logs of ISC NID UP304 updated 2024/11/18 16:59:56
[Section 1 - Event logs]

380 2024/11/18 16:53:49 [ERROR] SENSOR#1 CAN ERROR (Disappearing)

375 2024/11/18 16:53:44 [ERROR] SENSOR#1 CAN ERROR (Code: 0x0010) COMMUNICATION LOST

356 2024/11/18 16:53:25 [INFO] CONTROL UNIT System configuration #16

30 2024/11/18 16:53:52 [ERROR] SENSOR#1 ACCELEROMETER ERROR (Disappearing)

27 2024/11/18 16:47:56 [ERROR] SENSOR#1 ACCELEROMETER ERROR (Code: 0x0010) TILT ANGLE ERROR

5 2024/11/18 16:47:30 [ERROR] SENSOR#1 SIGNAL ERROR (Code: 0x0012) MASKING

0 2024/11/18 16:47:25 [INFO] CONTROL UNIT Dynamic configuration #1

0 2024/11/18 16:47:25 [INFO] CONTROL UNIT System Boot #60

92 Rel. 0 d 00:01:32 [INFO] CONTROL UNIT Detection exit (field #2)

90 Rel. 0 d 00:01:30 [INFO] CONTROL UNIT Detection exit (field #1)

70 Rel. 0 d 00:01:10 [INFO] SENSOR#1 Detection access (field #2, 3100 mm/20°)

61 Rel. 0 d 00:01:01 [INFO] SENSOR#1 Detection access (field #1, 1200 mm/30°)

0 Rel. 0 d 00:00:00 [INFO] CONTROL UNIT Dynamic configuration #1

0 0 d 00:00:00 [INFO] CONTROL UNIT System Boot #61

[Section 2 - Diagnostic events log]

380 Rel. 0 d 00:06:20 [ERROR] SENSOR #1 CAN ERROR (Disappearing)

375 Rel. 0 d 00:06:15 [ERROR] SENSOR #1 CAN ERROR (Code: 0x0010) COMMUNICATION LOST

356 Rel. 0 d 00:05:56 [INFO] CONTROL UNIT System configuration #16

30 Rel. 0 d 00:00:30 [ERROR] SENSOR #1 ACCELEROMETER ERROR (Disappearing)

27 Rel. 0 d 00:00:27 [ERROR] SENSOR #1 ACCELEROMETER ERROR (Code: 0x0012) TILT ANGLE ERROR

5 Rel. 0 d 00:00:05 [ERROR] SENSOR #1 SIGNAL ERROR (Code: 0x0014) MASKING

4.2.2.9 Event list

The event logs are listed below:

Event	Type
Diagnostic errors	ERROR
System Boot	INFO
System configuration	INFO
Factory reset	INFO
Stop signal	INFO
Restart signal	INFO
Detection access	INFO
Detection exit	INFO
Dynamic configuration in use	INFO
Muting status	INFO

Event	Type
Fieldbus connection	INFO
MODBUS connection	INFO
Session authentication	INFO
Validation	INFO
Log download	INFO
Teach-In	INFO

For further information about the events, see "INFO events" on the next page and " ERROR events (control unit)" on page 102.

4.2.2.10 Verbosity level

There are six verbosity levels for the log. The verbosity can be set during system configuration via the system application (in Inxpect Safety: **Settings** > **Activity History** > **Log verbosity level**; inInxpect Safety Studio: **DESIGN** > control unit card > **ACTIVITY HISTORY**).

Depending on the selected verbosity level, the events are logged in accordance to the following table:

Event	Level 0 (default)	Level 1	Level 2	Level 3	Level 4	Level 5
Diagnostic errors	x	x	x	x	x	x
System Boot	x	x	x	x	x	x
System configuration	x	x	x	x	x	x
Factory reset	x	x	x	x	x	x
Stop signal	x	x	x	x	x	x
Restart signal	x	x	x	x	x	x
Teach-In	x	x	x	x	x	x
Detection access	-	See "Verbosity level for detection access and exit events" below				
Detection exit	-	See "Verbosity level for detection access and exit events" below				
Dynamic configuration in use	-	-	-	-	x	x
Muting status	-	-	-	-	-	x

4.2.2.11 Verbosity level for detection access and exit events

Depending on the selected verbosity level, the detection access and exit events are logged as follows:

- LEVEL 0: no detection info is logged
- LEVEL 1: the events are logged at the control unit level, and the additional information is the detection distance (in mm) and the detection angle (in °)*at detection access

  Format:

  CONTROL UNIT Detection access (distance mm/azimuth°)

  CONTROL UNIT Detection exit

- LEVEL 2: the events are logged in a single field at the control unit level, and the additional information is: detection field, detection distance (in mm) and detection angle (in °)*at access, and detection field at exit

  Format:

  CONTROL UNIT Detection access (field #n, distance mm/azimuth°)

  CONTROL UNIT Detection exit (field #n)

- LEVEL 3 / LEVEL 4 / LEVEL 5 The events are logged:
  - in a single field at the control unit level, and the additional information is: detection field, detection distance (in mm) and detection angle (in °)* at access, and detection field at exit
  - at the sensor level and the additional information read by the sensor is: detection distance (in mm) and detection angle (in °)* at access, and detection field at exit

Format:

CONTROL UNIT #k Detection access (field #n, distance mm/azimuth°)

SENSOR #k Detection access (distance mm/azimuth°)

CONTROL UNIT Detection exit (field #n)

SENSOR #k Detection exit

Note*: see "Target position angle conventions" on page 134.*

4.2.3 INFO events

4.2.3.1 System Boot

Every time the system is powered up, the event is logged reporting the incremental count of the boot from the beginning of the life of the device.

Format: *System Boot #n*

Example:

0 2024/11/18 16:47:25 [INFO] CONTROL UNIT SYSTEM BOOT #60

4.2.3.2 System configuration

Every time the system is configured, the event is logged reporting the incremental count of the configuration from the beginning of the life of the device.

Format: *System configuration #3*

Example:

20 2024/11/18 16:47:25 [INFO] CONTROL UNIT System configuration #3

4.2.3.3 Factory reset

Every time a factory reset is required, the event is logged.

Format: *Factory reset*

Example:

20 2024/11/18 16:47:25 [INFO] CONTROL UNIT Factory reset

4.2.3.4 Stop signal

If configured, every change of the Stop Signal is logged as ACTIVATION or DEACTIVATION.

Format: *Stop signalACTIVATION/DEACTIVATION*

Example:

20 2024/11/18 16:47:25 [INFO] CONTROL UNIT Stop signal ACTIVATION

4.2.3.5 Restart signal

If configured, every time the system is waiting for the restart signal or the restart signal is received, the event is logged as WAITING or RECEIVED.

Format: *Restart signalWAITING/RECEIVED*

Example:

20 2024/11/18 16:47:25 [INFO] CONTROL UNIT Restart signal RECEIVED

4.2.3.6 Detection access

Every time motion is detected, a detection access is logged with additional parameters depending on the selected verbosity level: the detection field number, the sensor which detected the motion, the detection distance (in mm), and the detection angle (°)* (see "Verbosity level for detection access and exit events" on page 98).

Format: *Detection access (field #n, distance mm/azimuth°)*

Note*: see "Target position angle conventions" on page 134.*

Example:

20	2024/11/18 16:47:25	[INFO]	SENSOR #1	Detection access (field #1, 1200 mm/30°)

4.2.3.7 Detection exit

After at least one detection access event, a detection exit event related to the same field is logged when the detection signal returns to its default no-motion status.

Depending on the selected verbosity level additional parameters are logged: the detection field number, the sensor which detected the motion.

Format: *Detection exit (field #n)*

Example:

20	2024/11/18 16:47:25	[INFO]	CONTROL UNIT	Detection exit (field #1)

4.2.3.8 Dynamic configuration in use

At every change of the dynamic configuration, the new ID of the dynamic configuration selected is logged.

Format: *Dynamic configuration #1*

Example:

20	2024/11/18 16:47:25	[INFO]	CONTROL UNIT	Dynamic configuration #1

4.2.3.9 Muting status

Every change of the muting status of each sensor is logged as disabled or enabled.

Note*: the event indicates a change of the muting status of the system. It does not correspond to the muting request.*

Format: *Mutingdisabled/enabled*

Example:

20	2024/11/18 16:47:25	[INFO]	SENSOR#1	Mutingenabled

4.2.3.10 Fieldbus connection

The Fieldbus communication status is logged as CONNECTED, DISCONNECTED or FAULT.

Format: *Fieldbus connection CONNECTED/DISCONNECTED/FAULT*

Example:

20	2024/11/18 16:47:25	[INFO]	CONTROL UNIT	Fieldbus connection CONNECTED

4.2.3.11 MODBUS connection

The MODBUS communication status is logged as CONNECTED or DISCONNECTED.

Format: *MODBUS connection CONNECTED/DISCONNECTED*

Example:

20	2024/11/18 16:47:25	[INFO]	CONTROL UNIT	MODBUS connection CONNECTED

4.2.3.12 Session authentication

The status of the session authentication and the interface used (USB/ETH) are logged.

Format: *SessionOPEN/CLOSE/WRONG PASSWORD/UNSET PASSWORD/TIMEOUT/CHANGE PASSWORDviaUSB/ETH*

Example:

20	2024/11/18 16:47:25	[INFO]	CONTROL UNIT	SessionOPENviaUSB

4.2.3.13 Validation

Every time a validation activity starts or ends on the device, it is logged. The interface used (USB/ETH) is logged as well.

Format: *ValidationSTARTED/ENDEDviaUSB/ETH*

Example:

20	2024/11/18 16:47:25	[INFO]	CONTROL UNIT	ValidationSTARTEDviaUSB

4.2.3.14 Log download

Every time a log download is performed on the device, it is logged. The interface used (USB/ETH) is logged as well.

Format: *Log downloadviaUSB/ETH*

Example:

20	2024/11/18 16:47:25	[INFO]	CONTROL UNIT	Log download viaUSB

4.2.3.15 Teach-In function

Every time the teach-in function is used, a few events are logged.

Format: *Teach-In REQUESTED*

Example:

286	2024/03/07 17:03:15	[INFO]	CONTROL UNIT	Teach-In REQUESTED

Format: *Teach-in READ DISTANCE(dm) n*

Example:

217	2024/03/07 17:03:18	[INFO]	SENSOR#1	Teach-in READ DISTANCE(dm) 19
218	2024/03/07 17:03:18	SENSOR#2	Teach-in READ DISTANCE(dm) 23	

Format: *Teach-in WAITING FOR VALIDATION n*

Example:

228	2024/03/07 17:03:20	[INFO]	CONTROL UNIT	Teach-in WAITING FOR VALIDATION

Format: *Teach-in VALIDATED n*

Example:

232	2024/03/07 17:03:23	[INFO]	CONTROL UNIT	Teach-in VALIDATED

Format: *Teach-in SET DISTANCE(dm) n*

Example:

234	2024/03/07 17:02:23	[INFO]	SENSOR#1	Teach-in SET DISTANCE(dm) 17
234	2024/03/07 17:02:23	[INFO]	SENSOR#2	Teach-in SET DISTANCE(dm) 21

Format: *Teach-in EXCEPTION message (see "EXCEPTION messages" below)*

Example:

104	2024/03/07 16:46:12	[INFO]	Teach-in EXCEPTION	Sensor #1 detection under min

4.2.3.16 EXCEPTION messages

- System fault
- System configuration
- No teach-in sensor available
- Sensor #n detection under min
- Generic fault (Code: xxx)

4.2.4 ERROR events (control unit)

4.2.4.1 Introduction

A diagnostic error is logged every time the periodic diagnostic functions detect a coming or going fault on the control unit.

4.2.4.2 Temperature errors (TEMPERATURE ERROR)

Error	Meaning
BOARD TEMPERATURE TOO LOW	Board temperature below minimum
BOARD TEMPERATURE TOO HIGH	Board temperature above maximum

4.2.4.3 Control unit voltage errors (POWER ERROR)

Error	Meaning
Control unit voltage UNDERVOLTAGE	Undervoltage error for the indicated voltage
Control unit voltage OVERVOLTAGE	Overvoltage error for the indicated voltage
ADC CONVERSION ERROR	ADC conversion error in the micro-controller

The following table describes the control unit voltage:

Screen printing	Description
VIN	Power supply voltage (+24 V DC)
V12	Internal supply voltage
V12 sensors	Sensors power supply voltage
VUSB	USB port voltage
VREF	Inputs reference voltage (**VSNS Error**)
ADC	Analog-digital converter

4.2.4.4 Peripheral error (PERIPHERAL ERROR)

Error detected by diagnostics relative to the micro-controller, its internal peripherals or memories.

4.2.4.5 Configuration errors (FEE ERROR)

Indicates that the system must still be configured. This message can appear when the system is first turned on or after reset to default values. It can also represent another error on the FEE (internal memory).

4.2.4.6 Output errors (OSSD ERROR)

Error	Meaning
OSSD 1 SHORT-CIRCUIT	Short-circuit error on MOS output 1
OSSD 2 SHORT-CIRCUIT	Short-circuit error on MOS output 2
OSSD 3 SHORT-CIRCUIT	Short-circuit error on MOS output 3
OSSD 4 SHORT-CIRCUIT	Short-circuit error on MOS output 4
OSSD 1 NO LOAD	No load on OSSD 1
OSSD 2 NO LOAD	No load on OSSD 2
OSSD 3 NO LOAD	No load on OSSD 3
OSSD 4 NO LOAD	No load on OSSD 4

4.2.4.7 Flash errors (FLASH ERROR)

A flash error represents an error on the external flash.

4.2.4.8 Dynamic configuration error (DYNAMIC CONFIGURATION ERROR)

A dynamic configuration error indicates an invalid dynamic configuration ID.

4.2.4.9 Internal communication error (INTERNAL COMMUNICATION ERROR)

Indicates that there is an internal communication error.

4.2.4.10 Input error (INPUT ERROR)

Error	Meaning
INPUT 1 REDUNDANCY	Error in the redundancy on Input 1
INPUT 2 REDUNDANCY	Error in the redundancy on Input 2
ENCODING	Invalid encoding when the encoded channel option is enabled
PLAUSIBILITY	0->1->0 transition not compliant with input functionality specification

4.2.4.11 Fieldbus error (FIELDBUS ERROR)

At least one of the inputs and outputs has been configured as **Fieldbus controlled**, but the Fieldbus communication is not established or not valid.

Error	Meaning
NOT VALID COMMUNICATION	Error on the Fieldbus

4.2.4.12 RAM error (RAM ERROR)

Error	Meaning
INTEGRITY ERROR	Wrong integrity check on the RAM

4.2.4.13 SD Backup or restore error (SD BACKUP OR RESTORE ERROR)

Error	Meaning
GENERIC FAIL	Unknown fault
TIMEOUT	Writing and reading internal operation timeout
NO_SD	microSD not present
WRITE OPERATION FAILED	Writing error on the microSD card
CHECK OPERATION FAILED	File corrupted or no file during restore from microSD card

4.2.4.14 Sensor configuration errors (SENSOR CONFIGURATION ERROR)

Error occurred on the sensors during the configuration process or at the system power up. At least one of the connected sensors did not get the correct configuration.

As details, the list of sensors not configured is reported.

4.2.5 ERROR events (sensor)

4.2.5.1 Introduction

A diagnostic error is logged every time the periodic diagnostic functions detect a coming or going fault on the sensor.

WARNING! No sensor errors are available if the sensor is in muting.

If requested by Technical Support, download the sensor debug info files and forward them to Inxpect for debugging (in Inxpect Safety: **Settings** > **Activity History** > **Download sensor debug info**).

4.2.5.2 Sensor configuration error (SENSOR CONFIGURATION ERROR)

Error occurred on the sensors during the configuration process or at the system power up. At least one of the connected sensors is not correctly configured.

The list of sensor configuration errors is the following:

Error	Meaning
UNKNOWN MODEL-TYPE	Unknown model-type
WRONG MODEL-TYPE	Model-type different from the one set during system configuration
RADIO BANDWIDTH n.a.	Selected radio bandwidth not supported
STATIC OBJECT DETECTION n.a.	Static object detection not supported
CUSTOM TARGET DETECTION n.a.	Custom target detection not supported
ADVANCED FOV n.a.	Advanced field of view not supported
ANTI-MASKING REF	Error occurred during the anti-masking reference grabbing
ANTI-ROTATION REF	Error occurred during the anti-rotation around axes reference grabbing
TIMEOUT	Timeout error occurred during the system recondition
ASSIGN NODE ID ERROR	Error occurred during the Node ID setting of the system recondition
SEQUENCE, STREAM SEQUENCE, STREAM END, STREAM CRC	Sequence error occurred during the sensor configuration
MISSING SENSORS	Too many sensors are missing during the system recondition

4.2.5.3 Misconfiguration error (MISCONFIGURATION ERROR)

The misconfiguration error occurs when the sensor does not have a valid configuration or it has received an invalid configuration from the control unit.

4.2.5.4 Status error and fault (STATUS ERROR/FAULT ERROR)

The status error occurs when the sensor is in an internal invalid status or it has reached an internal fault condition.

4.2.5.5 Protocol error (PROTOCOL ERROR)

The protocol error occurs when the sensor receives commands with an unknown format.

4.2.5.6 Sensor voltage errors (POWER ERROR)

Error	Meaning
***Sensor voltage* UNDERVOLTAGE**	Undervoltage error for the indicated voltage
***Sensor voltage* OVERVOLTAGE**	Overvoltage error for the indicated voltage

The following table describes the sensor voltage:

Screen printing	Description
VIN	Power supply voltage (+12 V DC)
V3.3	Internal chip power supply voltage
V1.2	Micro-controller power supply voltage
V1.8	Internal chip power supply voltage (1.8 V)
V1	Internal chip power supply voltage (1 V)

4.2.5.7 Anti-tampering sensor (TAMPER ERROR)

Error	Meaning
TILT ANGLE ERROR	Sensor rotation around the y-axis
ROLL ANGLE ERROR	Sensor rotation around the x-axis
PAN ANGLE ERROR	Sensor rotation around the z-axis

Note*: the information of the angle (in degrees) is reported.*

4.2.5.8 Signal error (SIGNAL ERROR)

The signal error occurs when the sensor detected an error in the RF signals part, in particular:

Error	Meaning
MASKING	The sensor is obstructed
MASKING REFERENCE MISSING	During the configuration process, it was not possible to get the masking reference
SIGNAL PATTERN ERROR	Radar internal fault or unexpected signal pattern

4.2.5.9 Temperature errors (TEMPERATURE ERROR)

Error	Meaning
BOARD TEMPERATURE TOO LOW	Board temperature below minimum
BOARD TEMPERATURE TOO HIGH	Board temperature above maximum
CHIP TEMPERATURE TOO LOW	Internal chip below minimum
CHIP TEMPERATURE TOO HIGH	Internal chip above maximum
IMU TEMPERATURE TOO LOW	IMU below minimum
IMU TEMPERATURE TOO HIGH	IMU above maximum

4.2.5.10 MSS error and DSS error (MSS ERROR/DSS ERROR)

Error detected by diagnostics relative to the internal micro-controllers (MSS and DSS), their internal peripherals or memories

4.2.6 ERROR events (CAN bus)

4.2.6.1 Introduction

A diagnostic error is logged every time the periodic diagnostic functions detect a coming or going fault on the CAN bus communication.

Depending on the communication bus side, the logged source can be the control unit or a single sensor.

4.2.6.2 CAN errors (CAN ERROR)

Error	Meaning
TIMEOUT	Timeout on message to sensor/control unit
CROSS CHECK	Two redundant messages do not coincide
SEQUENCE NUMBER	Message with sequence number different from the expected number
CRC CHECK	Packet control code does not match
COMMUNICATION LOST	Impossible to communicate with the sensor
PROTOCOL ERROR	Control unit and sensors have different and incompatible firmware versions
POLLING TIMEOUT	Timeout on data polling

NOTICE: *A shielded cable between the control unit and the first sensor, and between the sensors is strongly recommended. Nevertheless, route the CAN cables separately from high-potential power lines or through an exclusive conduit.*

4.2.7 Auto-resume

4.2.7.1 Availability

The auto-resume function is available for Pro line, Omni line, and Plug&Safe sensors.

4.2.7.2 Introduction

Some transient faults cause a permanent lock-out condition that prevents normal operation from being restored.

While the safe state is maintained, this behavior represents a limitation, especially for remote systems that are not easily accessible.

The Auto-resume function tries to restore the normal functioning of the sensor for five consecutive attempts: if the fault condition persists, the block condition is preserved. Otherwise, the normal functioning condition is automatically restored.

4.2.7.3 Function limitations

The following faults are not subjected to auto-resume:

- POWER ERROR
- SIGNAL ERROR
- TAMPER ERROR
- TEMPERATURE ERROR

The function is not performed when the sensor is muted.

4.3 Maintenance

Contents

This section includes the following topics:

4.3.1 Planned maintenance **107**
4.3.2 Extraordinary maintenance **107**

4.3.1 Planned maintenance

Generic maintenance technician

The generic maintenance technician is a person qualified only to perform basic maintenance without the administrator privileges required to modify the configuration of Inxpect SRE 200 Series through the application.

4.3.1.1 Cleaning

Keep the sensor clean and free of any work residues and conductive material to prevent masking and/or poor system operation.

4.3.1.2 Spare parts

See 200S Inxpect Spare Parts document on the https://tools.inxpect.com website.

4.3.2 Extraordinary maintenance

4.3.2.1 Machinery maintenance technician

The machinery maintenance technician is a qualified person with the administrator privileges required to modify the configuration of Inxpect SRE 200 Series through the system application and perform maintenance and troubleshooting.

4.3.2.2 Control unit firmware update

NOTICE: *control unit firmware update can only be performed on firmware versions of the same production line.*

Procedure using Inxpect Safety

1. Download the latest Inxpect Safety application version from the https://tools.inxpect.com website and install it on your computer.
2. In **Settings** > **General**, check if a new update is available.
3. Update without disconnecting from or turning off the device.

Procedure using Inxpect Safety Studio

1. Download the latest Inxpect Safety Studio application version from the https://tools.inxpect.com website and install it on your computer.
2. In **DESIGN** > control unit card > **Device info**, check if a new update is available.
3. Update without disconnecting from or turning off the device.

4.3.2.3 Replace a sensor: System recondition function

The system recondition function is useful for replacing an existing sensor without using the system application. If one or more sensors need to be replaced, the system must be reconfigured using the same combination and topology of sensors that were validated during the initial installation. Different sensor models must not be used.

WARNING! If the system recondition function has been configured through the safety Fieldbus and the digital inputs, the function can be used from both.

Note*: keep the scene static while running the system recondition function so that the anti-tampering functions can save their references.*

Note*: while running the system recondition function, the system goes to the safe state, deactivating the OSSDs, until the process is completed.*

1. Configure the digital inputs or Fieldbus to perform the system recondition function.
2. Connect a sensor without Node ID in the same position of the CAN bus line as the replaced sensor.
   ***Note**: only one sensor at a time must be connected to complete the procedure correctly.*
3. Activate the function (via digital inputs or Fieldbus) and wait for the operation to be performed. See "Control unit LED" on page 92 to know which is the system status.

The following actions are performed:

- The first available Node ID is assigned to the new sensor.
- The previous system configuration is sent to the control unit, and the surrounding environment is saved as a reference for the anti-tampering functions. The operation is saved in the event log as a standard **System configuration** event.
- The event is logged in the reports archive with the following strings in the **User, PC** column:
  - “sys-recondition-i” when the function is performed via digital input
  - “sys-recondition-f” when Fieldbus is used

For more details, see "Digital input signals" on page 116.

4.3.2.4 Back up the configuration to a PC

The current configuration can be backed up, including the input/output settings. The configuration is saved in a .cfg file, which can be used to restore the configuration or to facilitate configuration of several Inxpect SRE 200 Series.

Procedure using Inxpect Safety

1. In **Settings** > **General**, click **BACKUP**.
2. Select the file destination and save.

***Note**: user login credentials are not saved using this backup mode.*

Procedure using Inxpect Safety Studio

1. In **MENU**, click **Save**.
2. Select the file destination and save.

***Note**: user login credentials are not saved using this backup mode.*

4.3.2.5 Back up the configuration to a microSD card

If the control unit is provided with a microSD slot, a backup file of the system settings, and (optionally) the login credentials of all the users, can be stored on the microSD card. The SD Backup function can be enabled/disabled via the system application, and the backup of all users' login credentials can be enabled or disabled.

Procedure using Inxpect Safety

1. To enable the SD Backup function, in **Admin** > **SD Card** select **Automatic backup creation**.
2. To enable the saving of all users' login credentials, select **Users data included**.
3. To perform the backup, insert a microSD card into the control unit memory card slot.
   ***Note**: the microSD card is not supplied with the control unit. For details about the microSD card specifications, see "microSD card specifications" on the next page*
4. In the Inxpect Safety application, click **APPLY CHANGES**: the backup is automatically performed.

***Note**: the settings of the **Automatic backup creation** options are not saved during the microSD backup.*

Procedure using Inxpect Safety Studio

1. To enable the SD Backup function, in **DESIGN** > control unit card > **OTHER OPTIONS** > **SD Card**, select **Automatic backup creation**.
2. To enable the saving of all users' login credentials, select **Users data included**.
3. To perform the backup, insert a microSD card into the control unit memory card slot.
   ***Note**: the microSD card is not supplied with the control unit. For details about the microSD card specifications, see "microSD card specifications" on the next page*
4. In the Inxpect Safety Studio application, click **UPLOAD**: the backup is automatically performed, including saving the surrounding environment.

***Note**: the settings of the **Automatic backup creation** options are not saved during the microSD backup.*

4.3.2.6 Load a configuration from a PC

Procedure using Inxpect Safety

1. In **Settings** > **General**, click **RESTORE**.
2. Select the previously saved .cfg file (see "Back up the configuration to a PC" above) and open it.

***Note**: a re-imported configuration requires new downloading onto the control unit and approval according to the safety plan.*

Procedure using Inxpect Safety Studio

1. In **MENU**, click **Open File**.
2. Select the previously saved .cfg file (see "Back up the configuration to a PC" on the previous page) and open it.

***Note**: a re-imported configuration requires new downloading onto the control unit and approval according to the safety plan.*

4.3.2.7 Load a configuration from a microSD card

If the control unit is provided with a microSD slot, the administrator can restore both the system settings and (if any) the login credentials of all the users. This requires a valid backup file saved on a microSD. The SD Restore function can be enabled/disabled through the system application. By default the option is enabled.

***Note**: this SD Restore function also includes a System recondition operation, see "Replace a sensor: System recondition function" on page 107.*

1. To perform the restore, insert the microSD card with the saved configuration into the memory card slot of the new control unit.
   ***Note**: the microSD card is not supplied with the control unit. For details about the microSD card specifications, see "microSD card specifications" below*
2. Press the SD Restore button on the control unit for at least 5 seconds: the system status LEDs turn off, and when the reset is performed, the LEDs return to the previous state.

***Note**: to disable the SD Restore function, in Inxpect Safety: **Admin** > **SD Card** deselect **Enable restore by button**; in Inxpect Safety Studio: **DESIGN** > control unit card > **OTHER OPTIONS** > **SD Card**.*

The following actions are performed:

- The system configuration is sent to the control unit, and the surrounding environment is saved as a reference for the anti-tampering functions.
- The event is logged in the reports archive with the string **Restore-via-sdcard**.

4.3.2.8 microSD card specifications

Type	microSD
File system	FAT32
Recommended capacity	32 GB or less

5. Technical references

5.1 Data and parameters

Contents

This section includes the following topics:

5.1.1 Technical data **111**
5.1.2 Digital input signals **116**
5.1.3 Control units layout **129**
5.1.4 Control unit parameters **132**
5.1.5 Target position angle conventions **134**
5.1.6 Separation distance calculation **134**

5.1.1 Technical data

5.1.1.1 General specifications

Detection method	Inxpect motion detection algorithm based on FMCW radar
Frequency	Working band: • for S201A model: 60.6-62.8 GHz • for S202A model: 60.7-62.9 GHz • for S203A model: 61.2-63.4 GHz Maximum radiated power: see National configuration addendum Modulation: FMCW
Detection interval	From 0 to 5 m (from 0 to 16.4 ft)
Detectable target RCS (Human detection)	0.17 m^2
Field of view	Horizontal angular coverage: • S201A and S203A models: programmable from 10° to 100° • S202A model: programmable from 20° to 100° Vertical angular coverage: • S201A model: 20° • S202A model: programmable from 30° to 90° • S203A model: 12° S202A-MV sensor: the sensor provides a reduced set of parameters and two different exclusive SPE functions (see "Configuration parameters" on page 189 and "Configuration parameters" on page 186)
Decision probability	> 1-(2.5E-07)
CRT (Certified Restart Timeout)	4 s
Guaranteed response time	Access detection: < 100 ms * Restart prevention: 4000 ms **WARNING! During the real-time validation and the download of the log file, the response time is not guaranteed.**
Total consumption	Max. 26.5 W (control unit and sensors)
Electrical protections	Polarity inversion Overcurrent through resettable integrated fuse (max. 5 s @ 8 A)
Overvoltage category	II
Altitude	Max. 1500 m ASL
Air humidity	Max. 95%
Noise emission	Negligible**

Note*: *the value depends on the Electromagnetic robustness level set through the system application, see "Electromagnetic robustness" on page 49.*

Note**: *the A-weighted emission sound pressure level does not exceed 70 dB(A).*

5.1.1.2 Safety parameters

SIL (Safety Integrity Level)	2
HFT	0
SC*	2
TYPE	B
PL (Performance Level)	d
ESPE Type (EN 61496-1)	3
Category (EN ISO 13849)	3 equivalent
Class (IEC TS 62998-1)	D
Communication protocol (sensors-control unit)	CAN complies with standard EN 50325-5
Mission time	20 years
$MTTF_D$	42 years
PFH_D	With Fieldbus communication: • Access detection: 1.40E-08 [1/h] • Restart prevention: 1.40E-08 [1/h] • Muting: 6.37E-09 [1/h] • Stop signal: 6.45E-09 [1/h] • Restart signal: 6.45E-09 [1/h] • Dynamic Configuration Switch: 6.37E-09 [1/h] • Fieldbus controlled: 6.45E-09 [1/h] Without Fieldbus communication: • Access detection: 1.30E-08 [1/h] • Restart prevention: 1.30E-08 [1/h] • Muting: 5.37E-09 [1/h] • Stop signal: 5.45E-09 [1/h] • Restart signal: 5.45E-09 [1/h] • Dynamic Configuration Switch: 5.37E-09 [1/h] • Fieldbus controlled: 5.45E-09 [1/h]
SFF	≥ 99.89%
DCavg	≥ 99.46%
MRT**	< 10 min
Safe state when a fault occurs	At least one channel for each safety output is in OFF-state. Stop message sent on Fieldbus (if available) or communication interrupted

Note*: *the systematic capability is guaranteed only if the user uses the product according to the instructions of this manual and uses the product in the appropriate environment.*

Note**: *the MRT considered is the Technical Mean Repair Time, i.e., it takes in consideration availability of skilled personnel, adequate tools and spare parts. Considering the type of device, the MRT corresponds to the time necessary for the device replacement.*

5.1.1.3 Ethernet connection (if available)

Default IP address	192.168.0.20
Default TCP port	80 (range 1-65534)
Default netmask	255.255.255.0
Default gateway	192.168.0.1

5.1.1.4 Control unit features

Outputs	Configurable as follows: • 4 Output Signal Switching Devices (OSSDs) (used as single channels) • 2 dual channel safety outputs • 1 dual channel safety output and 2 Output Signal Switching Devices (OSSDs)
OSSD characteristic	• Maximum resistive load: 100 KΩ • Minimum resistive load: 70 Ω • Maximum capacitive load: 1000 nF • Minimum capacitive load: 10 nF
Safety outputs	High-side outputs (with extended protection function) • Maximum current: 0.4 A • Maximum power: 11.2 W The OSSDs provide what follows: • ON-state: from Uv-1V to Uv (Uv = 24V +/- 4V) • OFF-state: from 0 V to 2.5 V r.m.s.
Inputs	Configurable as follows: • 4 single channel (cat. 2) type 3 digital inputs with common GND • 2 dual channel (cat. 3) type 3 digital inputs with common GND • 1 dual channel (cat. 3) and 2 single channels (cat. 2) type 3 digital inputs with common GND See "Voltage and current limits for digital inputs" on page 139.
Fieldbus interface (if available)	Ethernet based interface with different standard Fieldbus
Power supply	24 V DC (20–28 V DC) * Maximum current: 1.2 A
Consumption	Max. 5 W
Assembly	On DIN rail
Weight	For Type A: with cover: 170 g (6 oz) For Type B: with cover: 160 g (5.7 oz)
Degree of protection	IP20
Terminals	Section: 1 mm² (16 AWG) max. Maximum current: 4 A with 1 mm² cables (16 AWG)
Impact test	For Type A: 0.5 J, 0.25 kg ball from a 20 cm height For Type B: 1 J, 0.25 kg ball from a 40 cm height
Shock/Bump	For Type A: in accordance with IEC/EN 61496-1:2013 sec. 5.4.4.2 (IEC 60068-2-27) For Type B: in accordance with IEC/EN 61496-1:2020 sec. 5.4.4.2 class 5M3 (IEC 60068-2-27)
Vibration	For Type A: in accordance with IEC/EN 61496-1:2013 sec. 5.4.4.1 (IEC 60068-2-6) For Type B: in accordance with IEC/EN 61496-1:2020 sec. 5.4.4.1 class 5M3 (IEC 60068-2-6 and IEC 60068-2-64)
Pollution degree	2
Outdoor use	No
Operating temperature	From -30 to +60 °C (from -22 to +140 °F)
Storage temperature	From -40 to +80 °C (from -40 to +176 °F)

Note*: the control unit shall be supplied by an isolated power source which complies with the standard IEC/EN 60204-1 and fulfils the requirements of:

- *Limited-Energy Circuit in accordance with IEC/UL/CSA 61010-1/ IEC/UL/CSA 61010-2-201 or*
- *Limited Power Source (LPS) in accordance with IEC/UL/CSA 60950-1 or*
- *(For North America and/or Canada only) a Class 2 supply source which complies with the National Electrical Code (NEC), NFPA 70, Clause 725.121 and Canadian Electrical Code (CEC), Part I, C22.1. (typical examples are a Class 2 transformer or a Class 2 power sources in compliance with, UL 5085-3/ CSA-C22.2 No. 66.3 or UL 1310/CSA-C22.2 No. 223).*

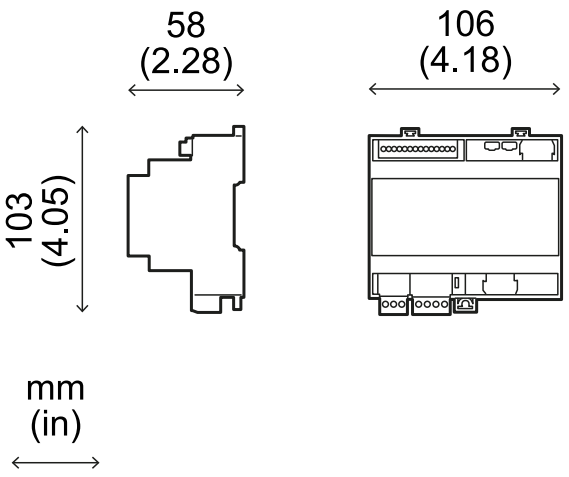

Type A

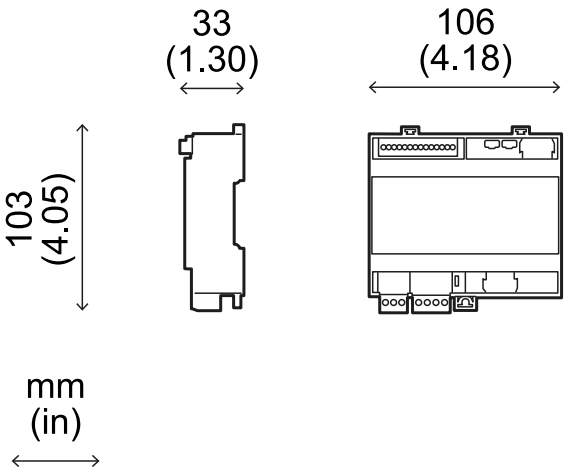

Type B

5.1.1.5 Sensor features

Connectors	2 5-pin M12 connectors (1 male and 1 female)
CAN bus termination resistance	120 Ω (not supplied, to be installed with a bus terminator)
Power supply	12 V DC ± 20%, through control unit
Consumption	For S201A and S203A model: • Average 2.2 W • Peak 3.4 W For S202A model: • Average 2.6 W • Peak 4.3 W
Degree of protection	Type 3 enclosure, according to UL 50E, in addition to IP 67 rating
Material	Sensor: PA66 Bracket: PA66 and glass fiber (GF)
Frame rate	62 fps
Weight	S201A: • With 2-axis bracket: 300 g (10.6 oz) • With 3-axis bracket: 355 g (12.5 oz) S202A, S203A: • With 2-axis bracket: 335 g (11.8 oz) • With 3-axis bracket: 395 g (13.9 oz)
Shock/Bump	For S201A model: in accordance with IEC/EN 61496-1:2013 sec. 5.4.4.2 (IEC 60068-2-27) For S202A model: in accordance with IEC/EN 61496-1:2020 sec. 5.4.4.2 class 5M3 (IEC 60068-2-27) For S203A model: in accordance with IEC/EN 61496-1:2020 sec. 5.4.4.2 class 5M3 (IEC 60068-2-27)
Vibration	For S201A model: in accordance with IEC/EN 61496-1:2013 sec. 5.4.4.1 (IEC 60068-2-6) For S202A model: in accordance with IEC/EN 61496-1:2020 sec. 5.4.4.1 class 5M3 (IEC 60068-2-6 and IEC 60068-2-64) For S203A model: in accordance with IEC/EN 61496-1:2020 sec. 5.4.4.1 class 5M3 (IEC 60068-2-6 and IEC 60068-2-64)
Pollution degree	4
Outdoor use	Yes
Operating temperature	From -30 to +60 °C (from -22 to +140 °F)*
Storage temperature	From -40 to +80 °C (from -40 to +176 °F)

Note*: in environmental conditions where the operating temperature can reach values higher than the supported range, install a cover to shield the sensor from sun rays.*

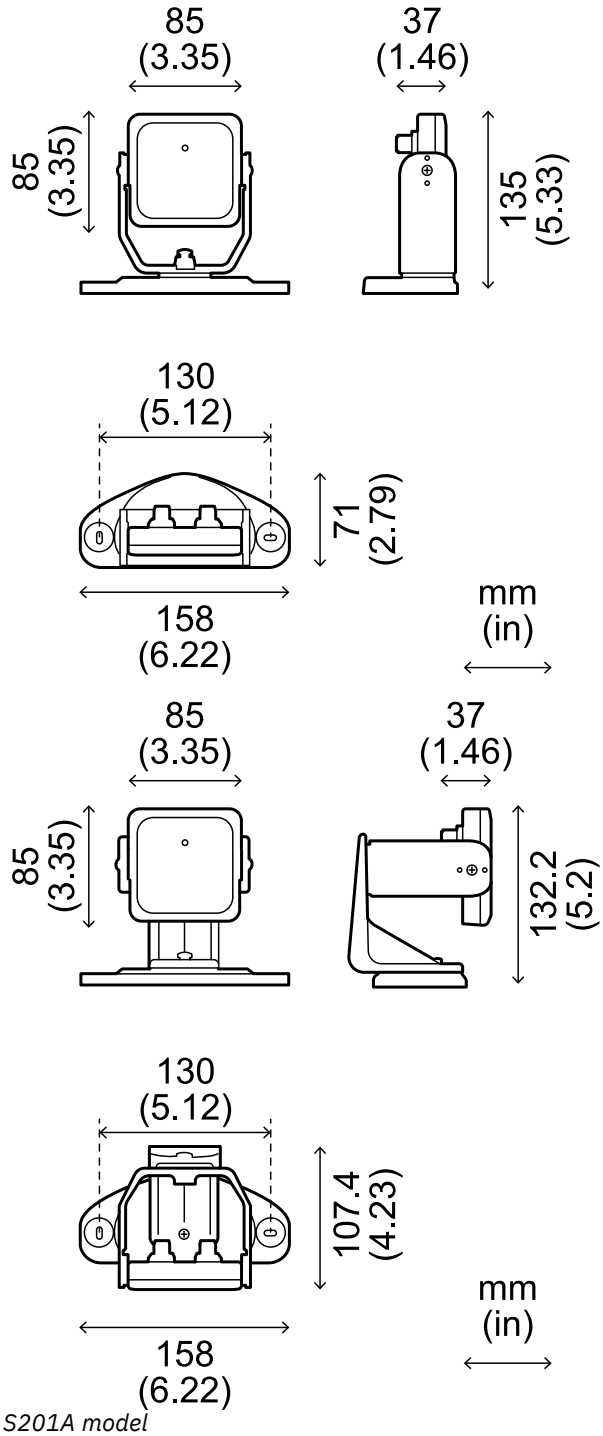

S201A model

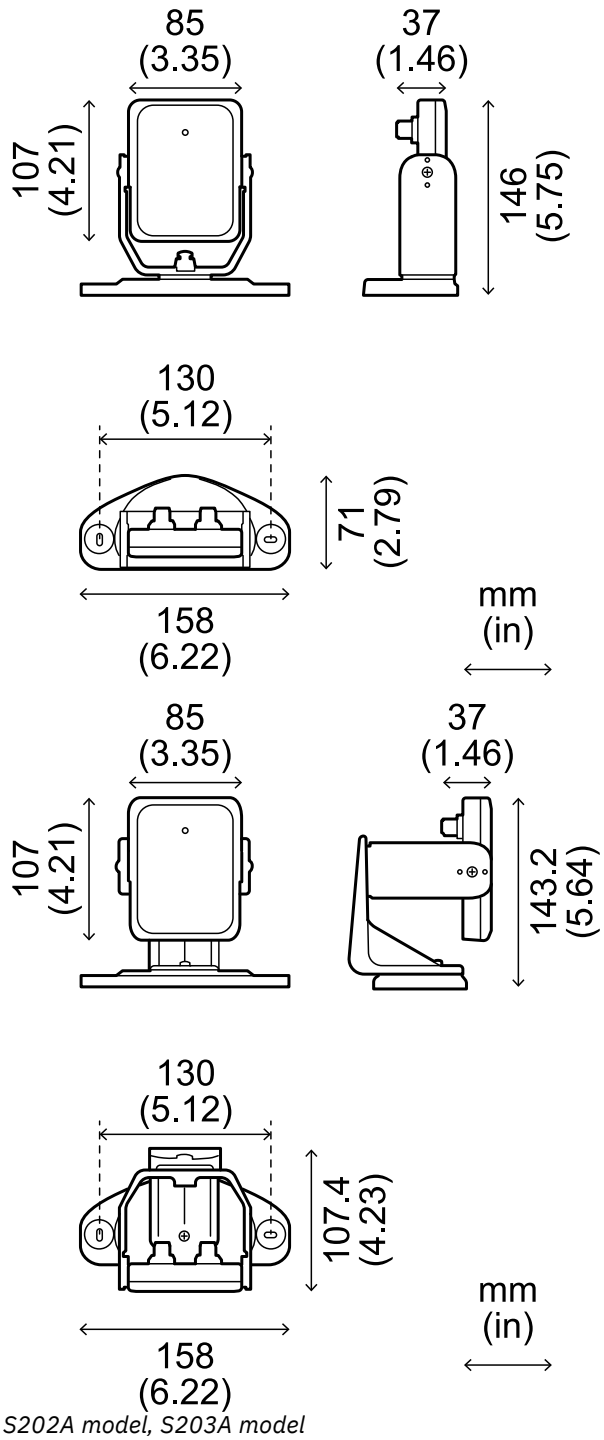

S202A model, S203A model

5.1.1.6 CAN bus cables recommended specifications

Section	2 x 0.50 mm2 (21 AWG) power supply 2 x 0.22 mm2 (24 AWG) data line
Type	Two twisted pairs (power supply and data) and one drain wire (or shield)
Connectors	5-pole M12 (see "Connectors M12 CAN bus" on page 140) Connectors shall be type 3 (raintight)
Impedance	120 Ω ±12 Ω (f = 1 MHz)
Shield	Shield with twisted wires in tin-plated copper. To be connected to ground circuit on the power supply terminal block of the control unit.
Standards	Cables shall be listed in accordance with application as described in the National Electrical Code, NFPA 70, and in the Canadian Electrical Code, C22.1. The length of the CAN bus line must be validated using the Cable validator tool.

5.1.1.7 Tamper-proof screws specifications

Pin Hex button head security screw

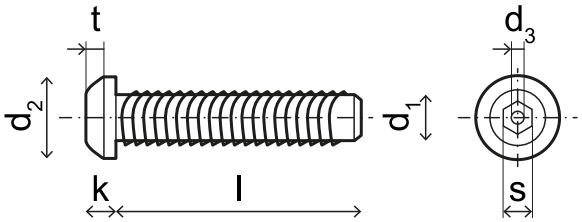

	Sensor-bracket screw	3-axis bracket
d_1	M4	M4
l	10 mm (0.39 in)	16 mm (0.63 in)
d_2	7.6 mm (0.30 in)	7.6 mm (0.30 in)
k	2.2 mm (0.09 in)	2.2 mm (0.09 in)
t	min 1.3 mm (0.05 in)	min 1.3 mm (0.05 in)
s	2.5 mm (0.10 in)	2.5 mm (0.10 in)
d_3	max. 1.1 mm (0.04 in)	max 1.1 mm (0.04 in)

5.1.1.8 Non tamper-proof screws specifications

Hex button head screw (2-axis bracket)

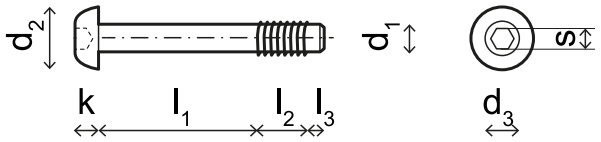

d_1	M4
l_1	19 mm (0.74 in)
l_2	6 mm (0.23 in)
l_3	2 mm (0.07 in)
d_2	7.6 mm (0.30 in)
k	3 mm (0.11 in)
s	2.5 mm (0.10 in)
d_3	4 mm (0.15 in)

5.1.1.9 Bottom screws specifications

The bottom screws can be:

- cheese head
- button head

***Note**: avoid using countersunk head screws.*

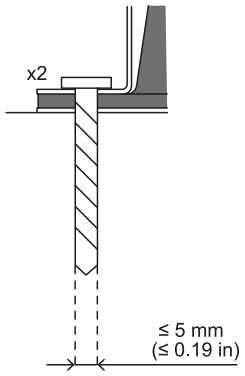

5.1.2 Digital input signals

5.1.2.1 Stop signal

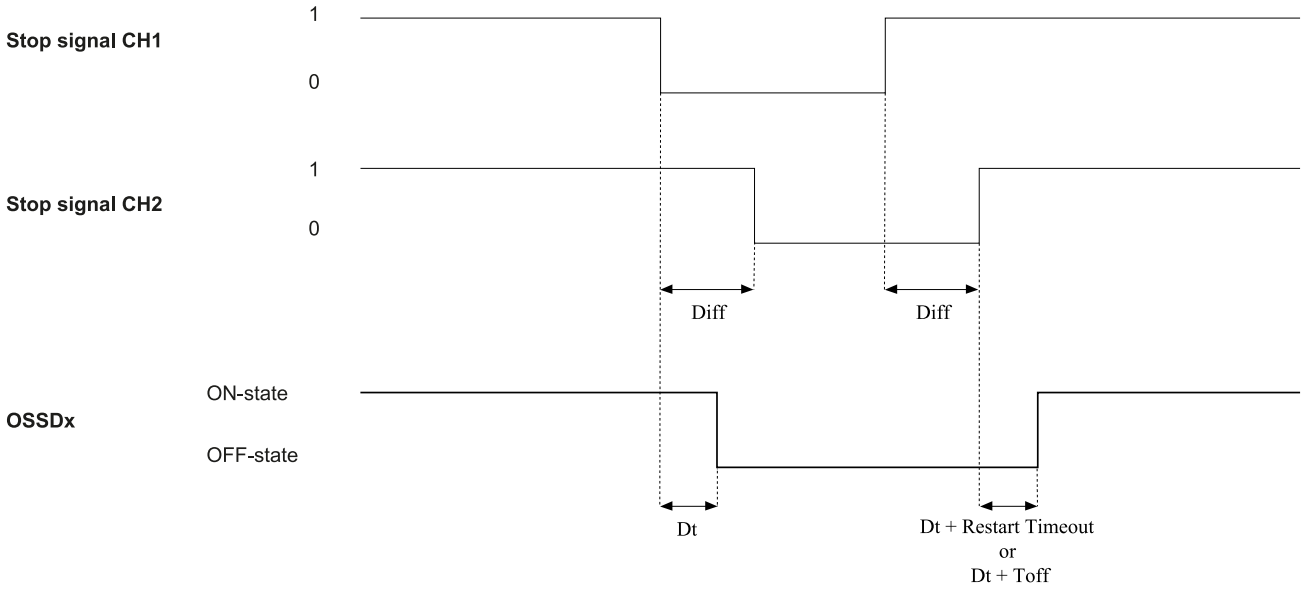

Part	Description
OSSDx: **Detection signal "N"/Detection signal group "N"**	Detection signal outputs deactivate on the falling edge of at least one of the two input channels of the input signal. They remain in OFF-state as long as one of the two input channels remains to the low logic status (0).
Stop signal CH1 **Stop signal CH2**	Interchangeable channel. As soon as one channel goes to the low logic level (0), Detection signal 1 and Detection signal 2 are set to OFF-state.
Diff	Less than 50 ms. If the value is greater than 50 ms, the diagnostic alarm starts and the system deactivates the safety outputs.
Dt	Activation delay. Less than 5 ms. For eXtended Line: if the Stop signal debounce filter is disabled, less than 5 ms; if the Stop signal debounce filter is enabled, less than 50 ms.

5.1.2.2 Muting (with/without pulse)

Without pulse (redundancy mode coherent)

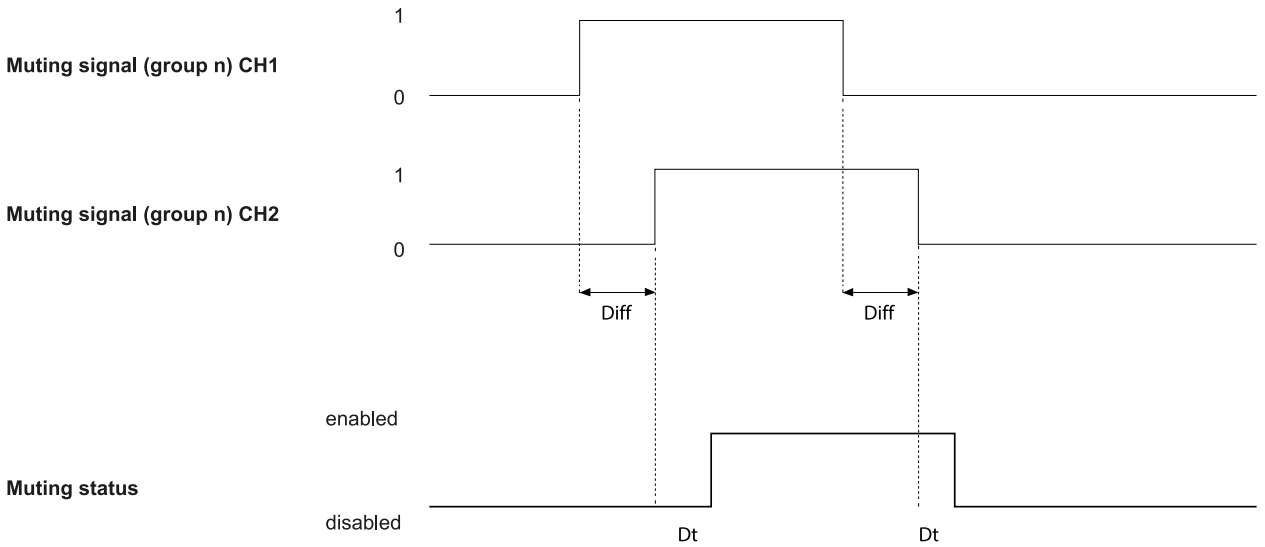

Part	Description
Diff	Less than 100 ms. If the value is greater than 100 ms, the diagnostic alarm starts and the system deactivates the safety outputs.
Muting signal (group *n*) CH 1 **Muting signal (group *n*) CH 2**	Interchangeable channel.
Muting status	They are enabled as long as both channels are at a high logic level (1) and deactivated when both channels go to a low logic level (0).
Dt	Activation/deactivation delay. Less than 50 ms.

Without pulse (redundancy mode inverted)

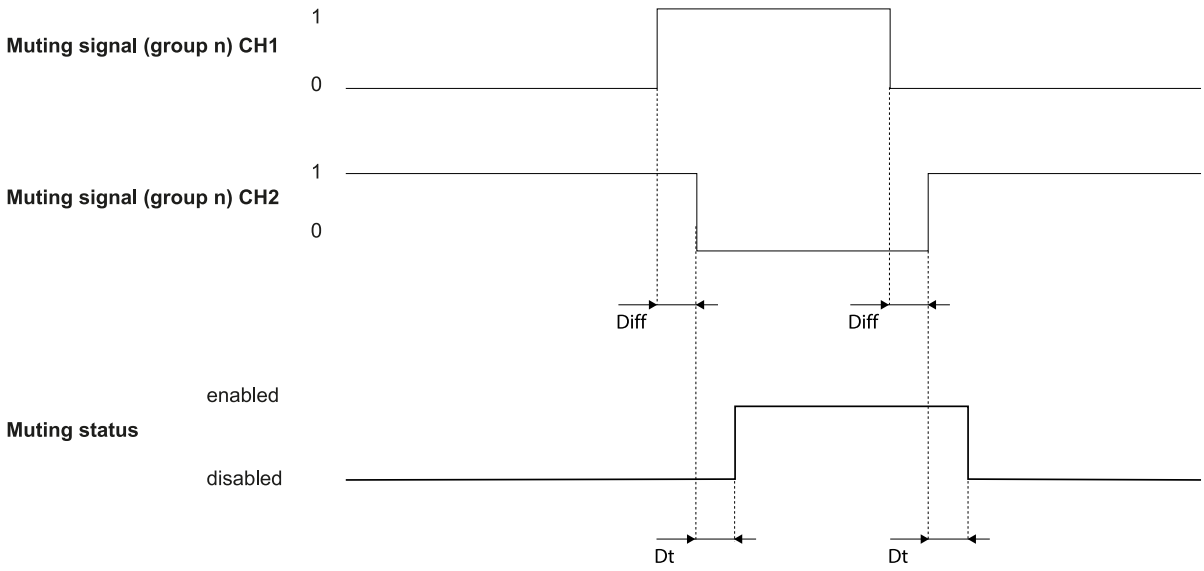

Part	Description
Diff	Less than 100 ms. If the value is greater than 100 ms, the diagnostic alarm starts and the system deactivates the safety outputs.
Muting status	They are enabled as long as channel 1 of the Muting signal is at a high logic level (1) and channel 2 is at a low logic level (0). Disabled as long as channel 1 is at a low logic level (0) and channel 2 is at a high logic level (1).
Dt	Activation/deactivation delay. Less than 50 ms.

With pulse

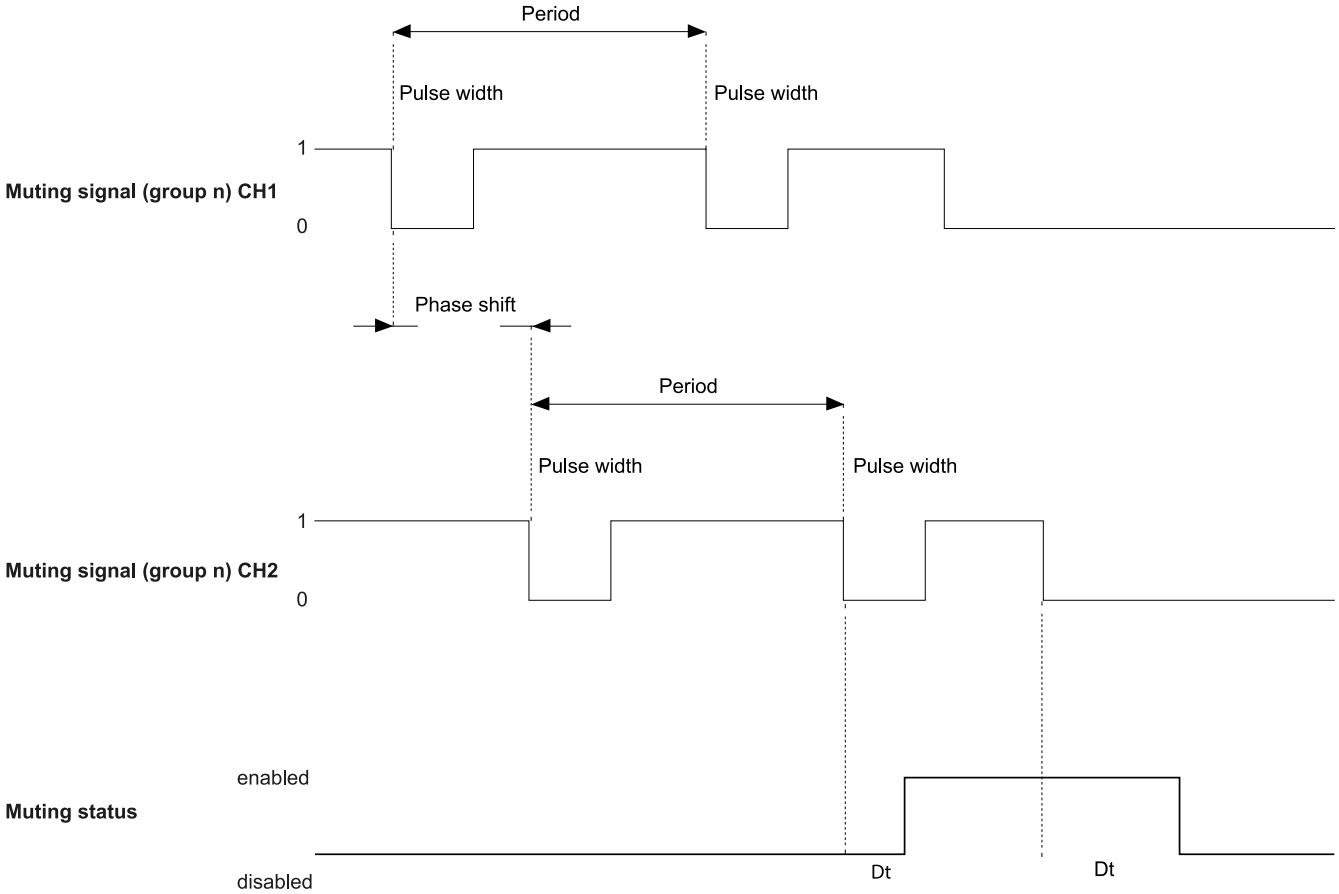

Part	Description
Diff	Less than 100 ms. If the value is greater than 100 ms, the diagnostic alarm starts and the system deactivates the safety outputs.
Muting signal (group *n*) CH 1 **Muting signal (group *n*) CH 2**	Interchangeable channel.
Muting status	They are enabled as long as both the input signals follow the configured muting parameters (pulse width, period, and phase shift).
Dt	Activation/deactivation delay. Less than three times the period.

5.1.2.3 Teach-In function (dual channel, redundancy mode coherent)

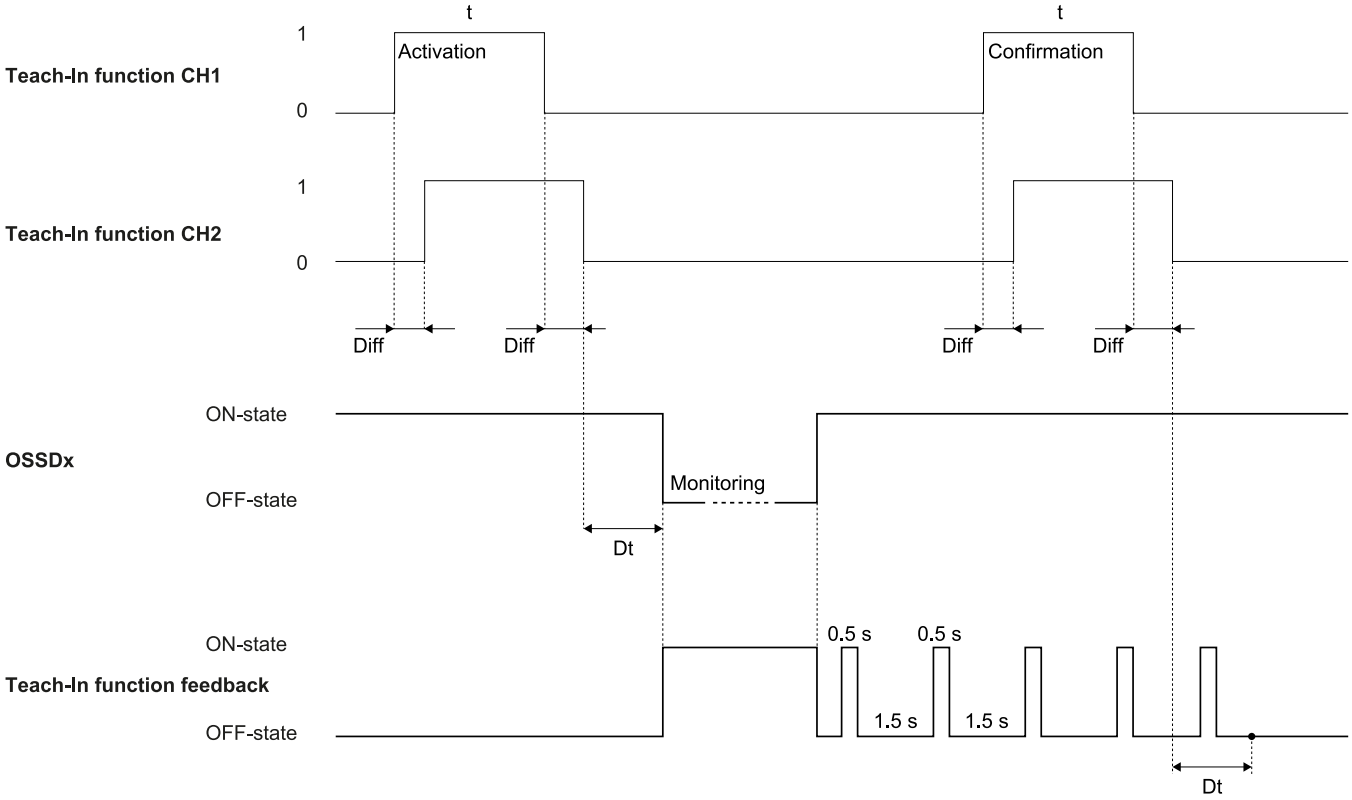

Part	Description
Teach-In CH1 **Teach-In CH2**	Interchangeable channel. Both Teach-In channels must have a transition of logical level 0 -> 1 -> 0. The time they stay at a high logical level (t) must be at least 200 ms and less than 5 s.
Dt	Activation delay. Less than 50 ms.
OSSDx: **Detection signal "N"/Detection signal group "N"**	The output goes to OFF-state as soon as the last channel has correctly completed the transition 0 -> 1 -> 0, then it goes back to ON-state as soon as the learning phase is completed.
Teach-In function feedback	It goes to ON-state during the learning phase, then it starts flashing (500 ms ON-state followed by 1500 ms OFF-state), waiting for the confirmation (of completed validation) to be received. ***Note**: in a fault condition, it flashes faster (500 ms ON-state followed by 500 ms OFF-state) as long as the fault is present.*
Diff	Less than 100 ms. If the value is greater than 100 ms, the system maintains the outputs deactivated.

5.1.2.4 Teach-In function (dual channel, redundancy mode inverted)

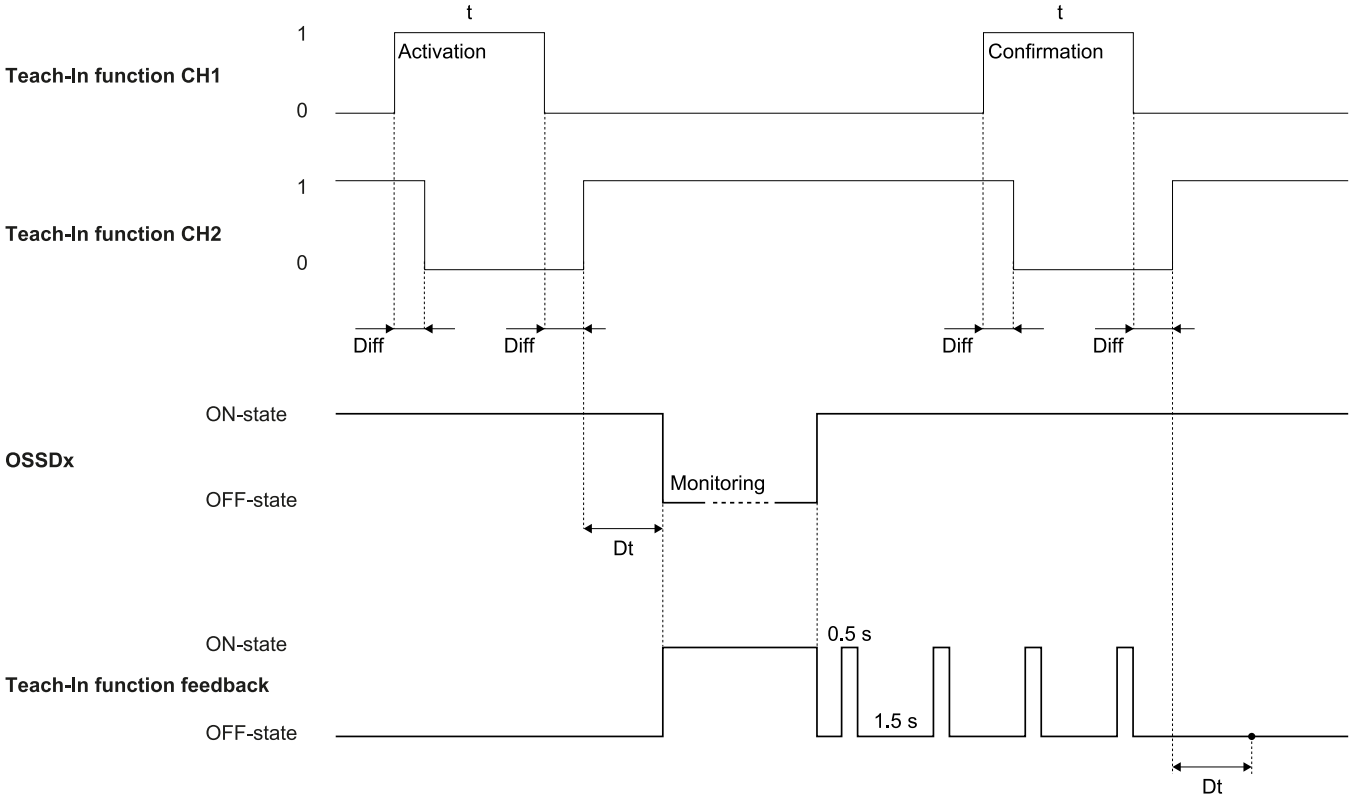

Part	Description
Teach-In CH1 **Teach-In CH2**	Channel 1 of the Teach-In must have a transition of logical level 0 -> 1 -> 0. Channel 2 of the Teach-In must have a transition of logical level 1 -> 0 ->1. The time Channel 1 stays at a high logical level and the time Channel 2 stays at a low logical level (t) must be at least 200 ms and less than 5 s.
Dt	Activation delay. Less than 50 ms.
OSSDx: **Detection signal "N"/Detection signal group "N"**	The output goes to OFF-state ass soon as the last channel has correctly completed the transition 0 -> 1 ->0, then it goes back to ON-state as soon as the learning phase is completed.
Teach-In function feedback	It goes to ON-state during the learning phase, then it starts flashing (500 ms ON-state followed by 1500 ms OFF-state) waiting for the confirmation (of completed validation) to be received. ***Note**: in case of fault condition, it flashes faster (500 ms ON-state followed by 500 ms OFF-state) as long as the fault is present.*
Diff	Less than 100 ms. If the value is greater than 100 ms, the system maintains the outputs deactivated.

5.1.2.5 Teach-In function (single channel)

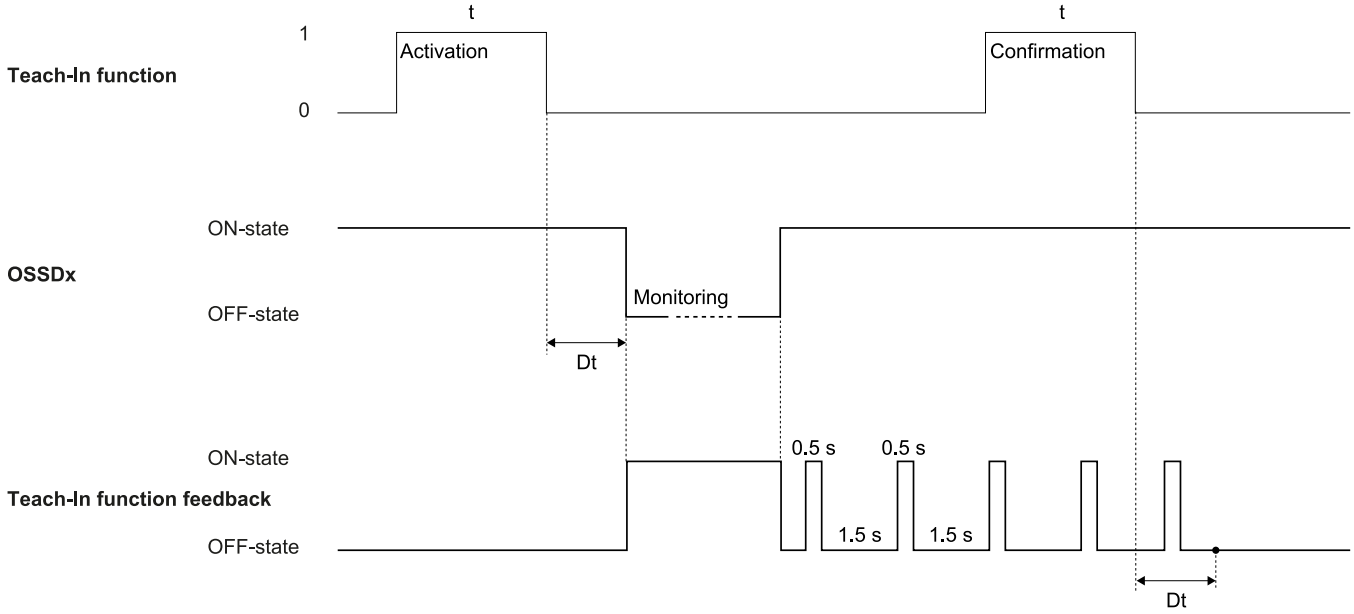

Part	Description
Teach-In	The channel must have a transition of logical level 0 -> 1 ->0. The time it stays at a high logical level (t) must be at least 200 ms and less than 5 s.
Dt	Activation delay. Less than 50 ms.
OSSDx: **Detection signal "N"/Detection signal group "N"**	The output goes to OFF-state ass soon as the last channel has correctly completed the transition 0 -> 1 ->0, then it goes back to ON-state as soon as the learning phase is completed.
Teach-In function feedback	It goes to ON-state during the learning phase, then it starts flashing (500 ms ON-state followed by 1500 ms OFF-state) waiting for the confirmation (of completed validation) to be received. ***Note**: in case of fault condition, it flashes faster (500 ms ON-state followed by 500 ms OFF-state) as long as the fault is present.*

5.1.2.6 Restart signal (dual channel, redundancy mode coherent)

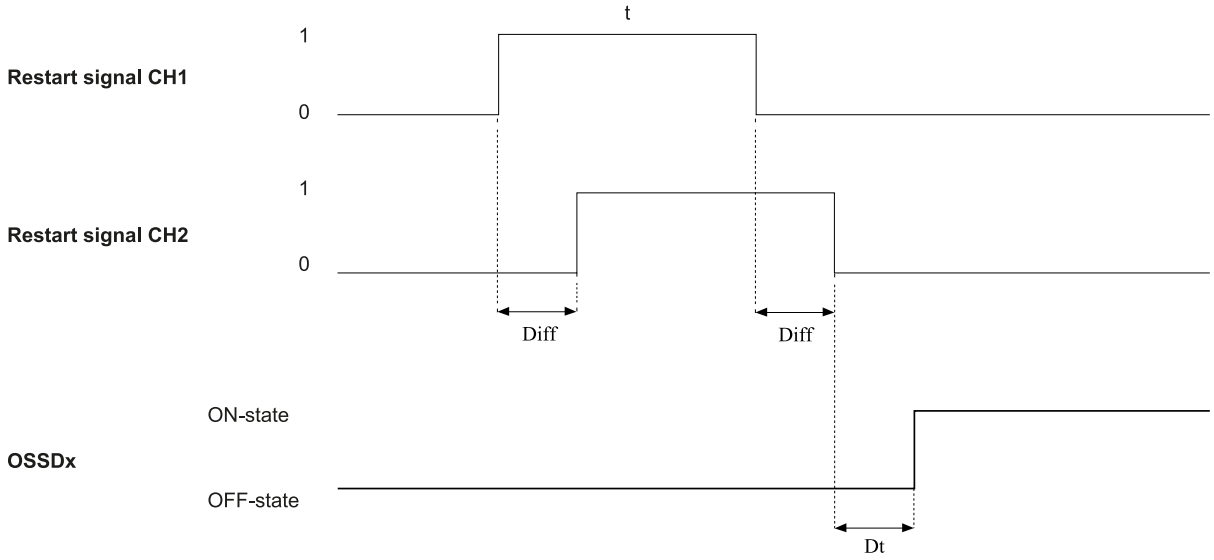

Part	Description
OSSDx: **Detection signal "N"/Detection signal group "N"**	Detection signal outputs go to ON-state as soon as the last channel has correctly completed the transition 0 -> 1 -> 0.
Restart signal CH1 **Restart signal CH2**	Interchangeable channel. Both channels of Restart signal must have a transition of logical level 0 -> 1 ->0. The time they stay at a high logical level (t) must be at least 200 ms and less than 5 s.
Dt	Activation delay. Less than 50 ms.
Diff	Less than 100 ms. If the value is greater than 100 ms, the system maintains the outputs deactivated.

5.1.2.7 Restart signal (dual channel, redundancy mode inverted)

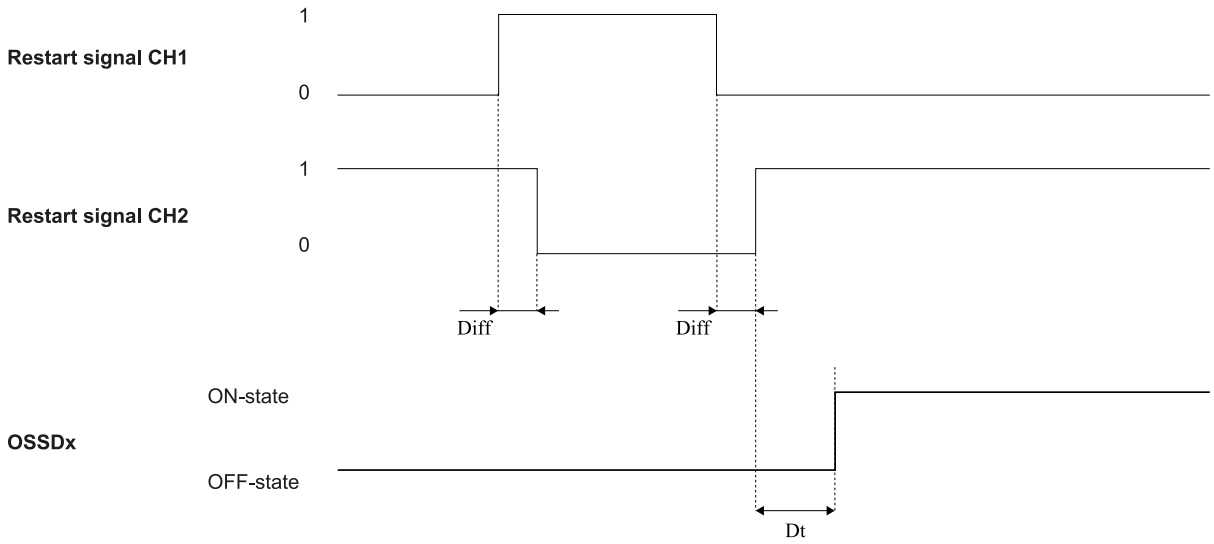

Part	Description
OSSDx: **Detection signal "N"/Detection signal group "N"**	Detection signal outputs go to ON-state as soon as the last channel has correctly completed the transition.
Restart signal CH1 **Restart signal CH2**	Channel 1 of the Restart signal must have a transition of logical level 0 -> 1 -> 0. Channel 2 of Restart signal must have a transition of logical level 1 -> 0 -> 1. The time Channel 1 stays at a high logical level and the time Channel 2 stays at a low logical level (t) must be at least 200 ms and less than 5 s.
Dt	Activation delay. Less than 50 ms.
Diff	Less than 100 ms. If the value is greater than 100 ms, the system maintains the outputs deactivated.

5.1.2.8 Restart signal (single channel)

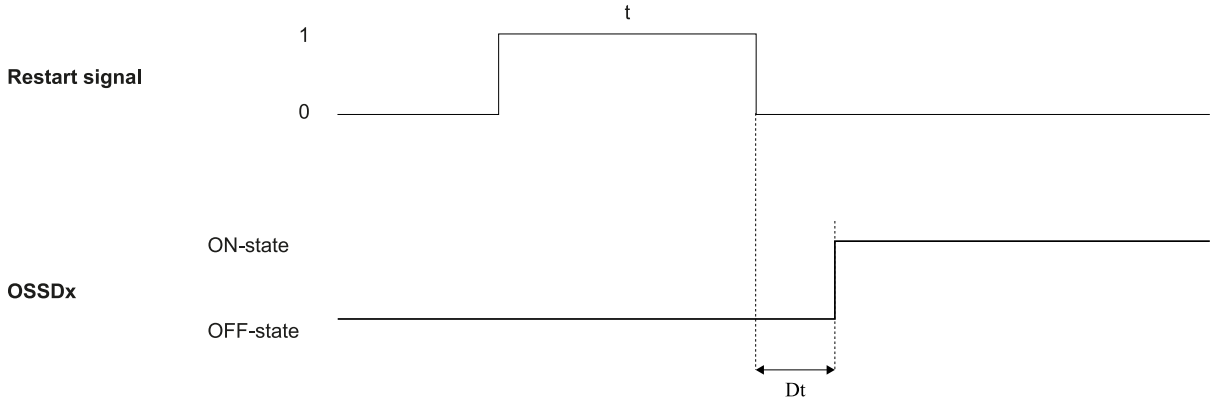

Part	Description
OSSDx: **Detection signal "N"/Detection signal group "N"**	Detection signal outputs go to ON-state as soon as the Restart signal has correctly completed the transition 0 -> 1 -> 0.
Restart signal	The channel must have a transition of logical level 0 -> 1 ->0. The time they stay at a high logical level (t) must be at least 200 ms and less than 5 s.
Dt	Activation delay. Less than 50 ms.

5.1.2.9 System recondition (dual channel, redundancy mode coherent)

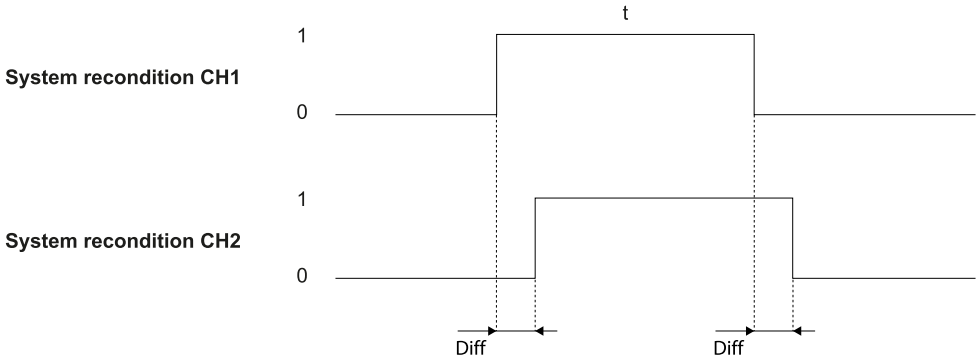

Part	Description
System recondition CH1 **System recondition CH2**	Interchangeable channel. Both channels of System recondition must have a transition of logical level 0 -> 1 ->0. They must stay at a high logical level (t) for at least 10 s and less than 30 s.
Diff	Less than 100 ms. If the value is greater than 100 ms, the system maintains the outputs deactivated.

5.1.2.10 System recondition (dual channel, redundancy mode inverted)

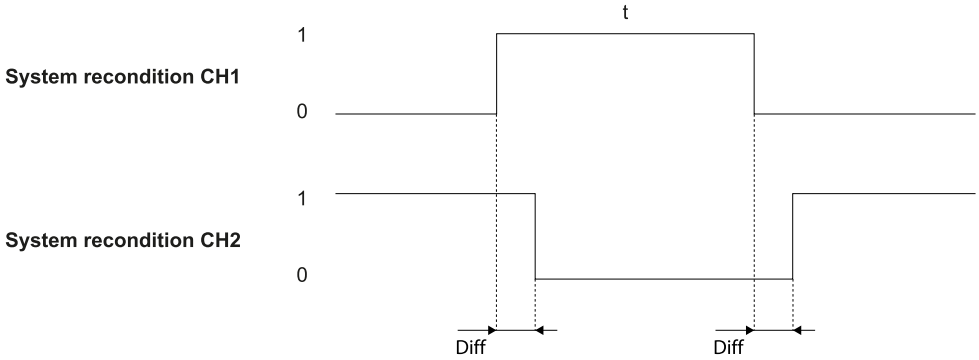

Part	Description
System recondition CH1 **System recondition CH2**	Channel 1 of System recondition must have a transition of logical level 0 -> 1 -> 0. Channel 2 of System recondition must have a transition of logical level 1 -> 0 -> 1. The time Channel 1 stays at a high logical level and the time Channel 2 stays at a low logical level (t) for at least 10 s and less than 30 s.
Diff	Less than 100 ms. If the value is greater than 100 ms, the system maintains the outputs deactivated.

5.1.2.11 System recondition (single channel)

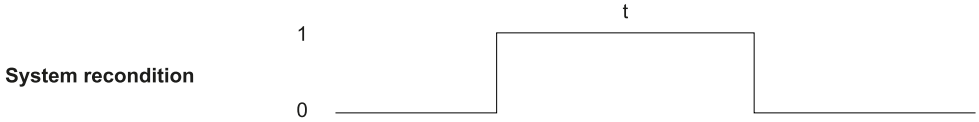

Part	Description
System recondition	The channel must have a transition of logical level 0 -> 1 ->0. The time it stays at a high logical level (t) must be at least 10 s and less than 30 s.

5.1.2.12 Restart signal + System recondition (dual channel, redundancy mode coherent)

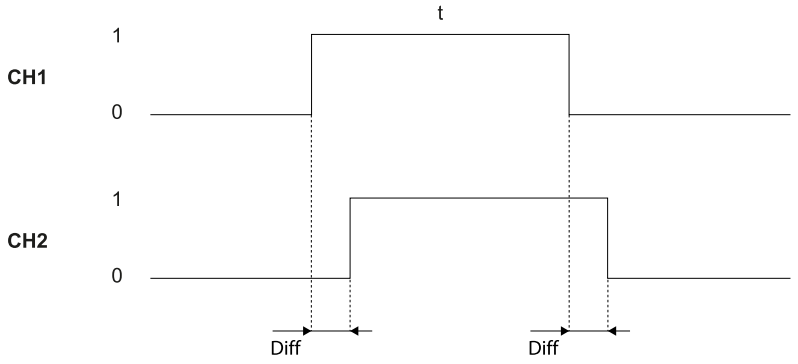

Part	Description
CH1 **CH2** **(Restart signal)**	Interchangeable channel. Both channels must have a transition of logical level 0 -> 1 ->0. The time they stay at a high logical level (t) must be at least 200 ms and less than 5 s. For details about the behavior of Detection signal 1 and 2 outputs and the deactivation delay, see "Restart signal (dual channel, redundancy mode coherent)" on page 123.
CH1 **CH2** **(System recondition)**	Interchangeable channel. Both channels must have a transition of logical level 0 -> 1 ->0. They must stay at a high logical level (t) for at least 10 s and less than 30 s.
Diff	Less than 100 ms. If the value is greater than 100 ms, the system maintains the outputs deactivated.

5.1.2.13 Restart signal + System recondition (dual channel, redundancy mode inverted)

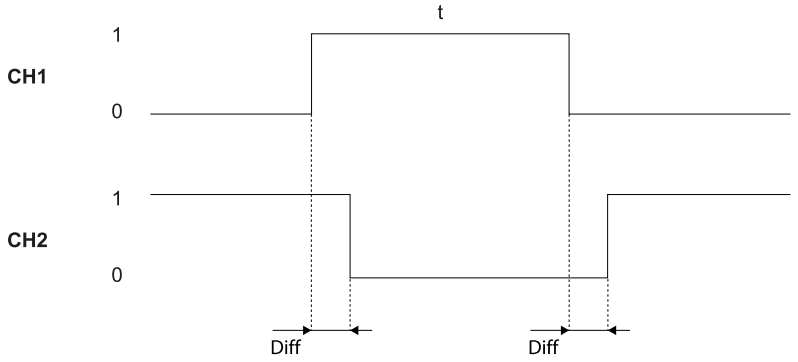

Part	Description
CH1 **CH2** **(Restart signal)**	Channel 1 of the Restart signal must have a transition of logical level 0 -> 1 -> 0. Channel 2 of Restart signal must have a transition of logical level 1 -> 0 -> 1. The time Channel 1 stays at a high logical level and the time Channel 2 stays at a low logical level (t) must be at least 200 ms and less than 5 s. For details about the behavior of Detection signal 1 and 2 outputs and the deactivation delay, see "Restart signal (dual channel, redundancy mode inverted)" on page 124.
CH1 **CH2** **(System recondition)**	Channel 1 of System recondition must have a transition of logical level 0 -> 1 -> 0. Channel 2 of System recondition must have a transition of logical level 1 -> 0 -> 1. The time Channel 1 stays at a high logical level and the time Channel 2 stays at a low logical level (t) for at least 10 s and less than 30 s.
Diff	Less than 100 ms. If the value is greater than 100 ms, the system maintains the outputs deactivated.

5.1.2.14 Restart signal + System recondition (single channel)

Part	Description
Restart signal	The channel must have a transition of logical level 0 -> 1 ->0. The time it stays at a high logical level (t) must be at least 200 ms and less than 5 s. For details about the behavior of Detection signal 1 and 2 outputs and the deactivation delay, see "Restart signal (single channel)" on page 124.
System recondition	The channel must have a transition of logical level 0 -> 1 ->0. The time it stays at a high logical level (t) must be at least 10 s and less than 30 s.

5.1.2.15 Dynamic configuration switch (redundancy mode coherent)

With one input

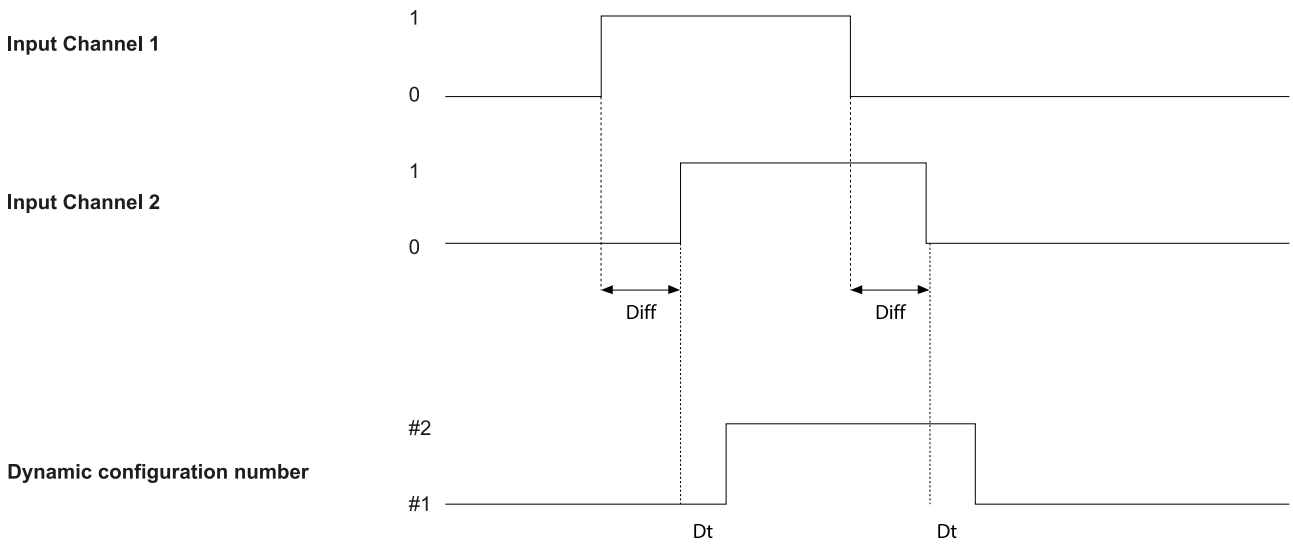

With two inputs (encoded channels disabled)

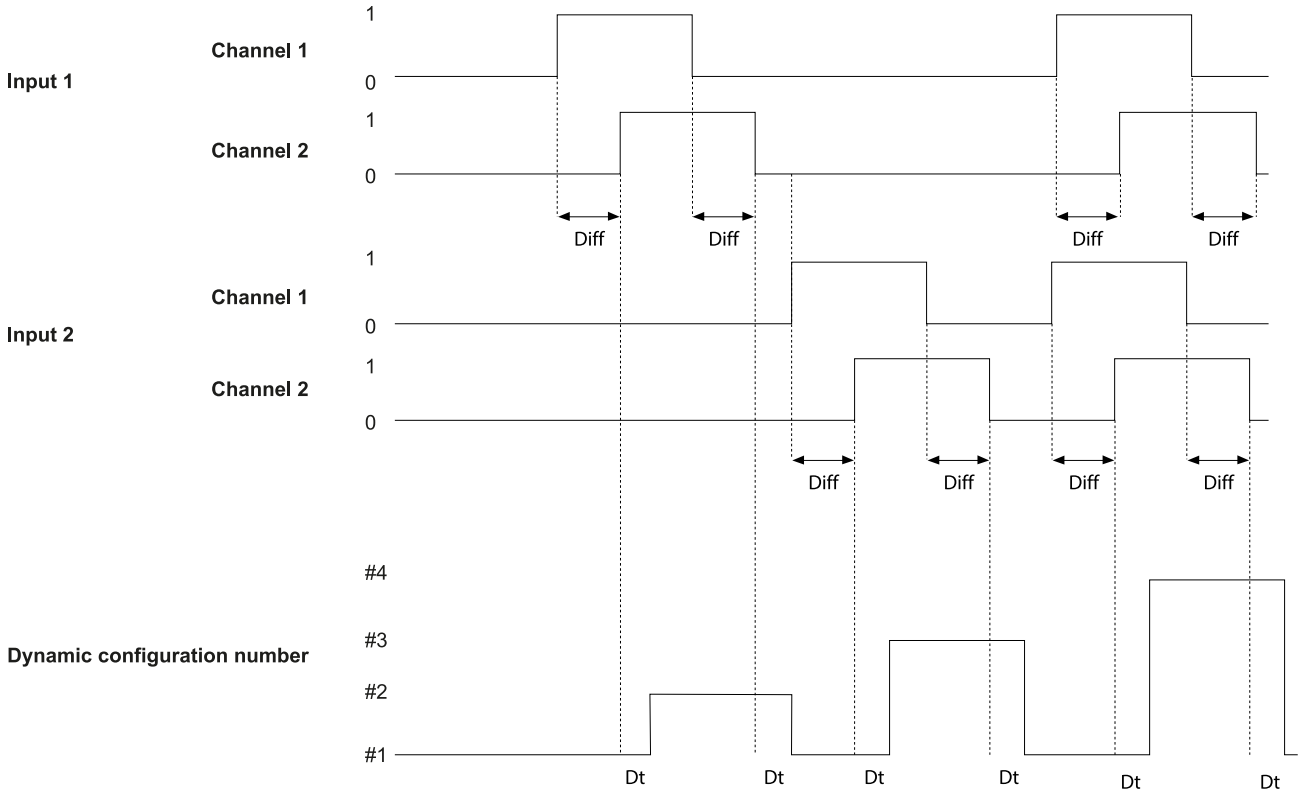

Part	Description
Diff	Less than 100 ms. If the value is greater than 100 ms, the diagnostic alarm starts and the system deactivates the safety outputs.
Dynamic configuration number	For details about the dynamic configuration number and the encoded channel option, see "Dynamic system configuration" on page 36.
Dt	Activation/deactivation delay. Less than 50 ms.

5.1.2.16 Dynamic configuration switch (redundancy mode inverted)

With one input

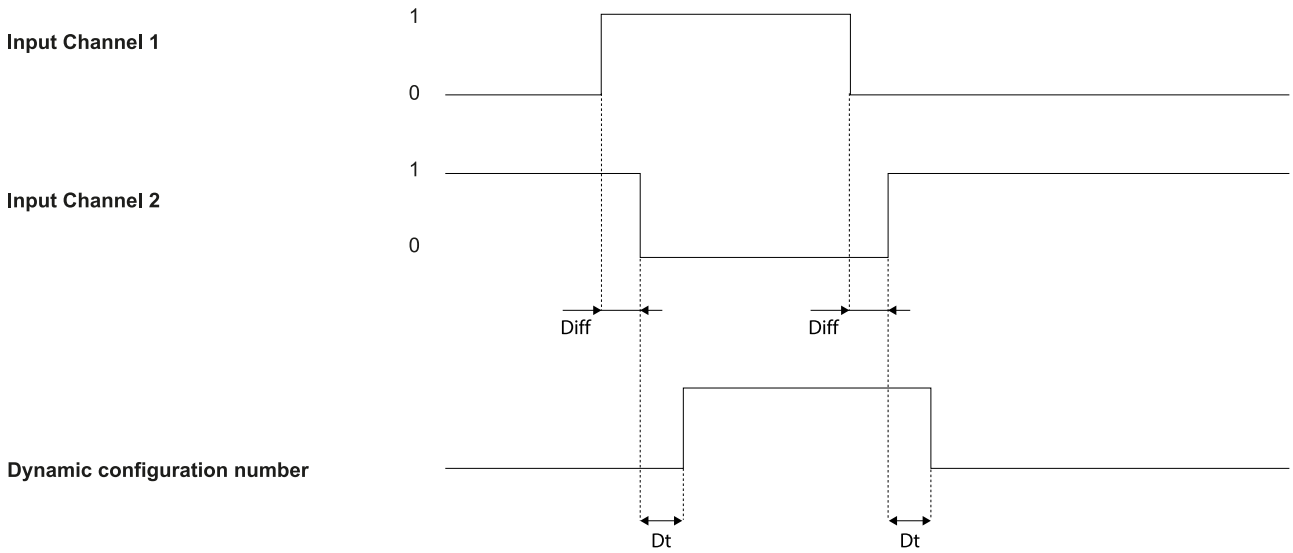

With two inputs

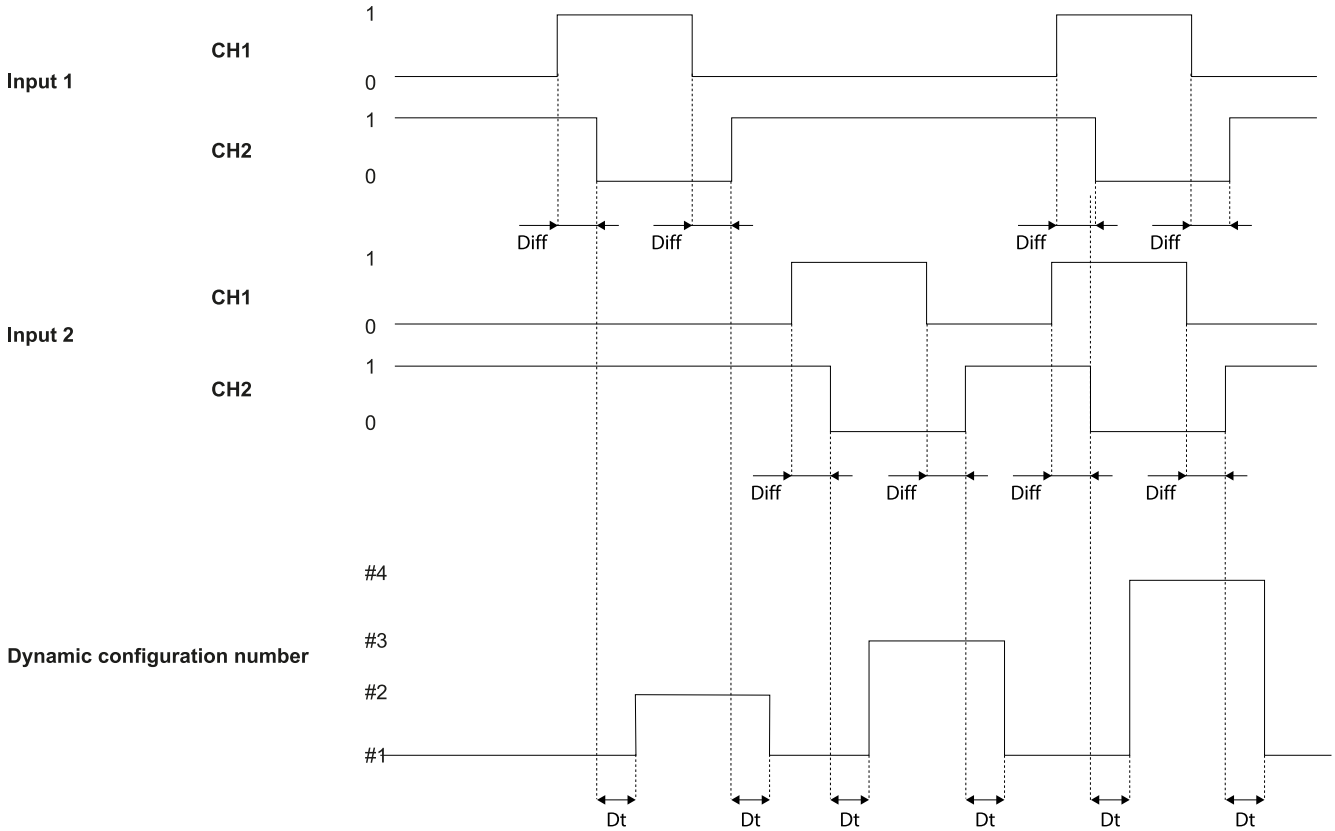

Part	Description
Diff	Less than 100 ms. If the value is greater than 100 ms, the diagnostic alarm starts and the system deactivates the safety outputs.
Dynamic configuration number	For details about the dynamic configuration number and the encoded channels option, see "Dynamic system configuration" on page 36.
Dt	Activation/deactivation delay. Less than 50 ms.

5.1.3 Control units layout

5.1.3.1 Type A control units

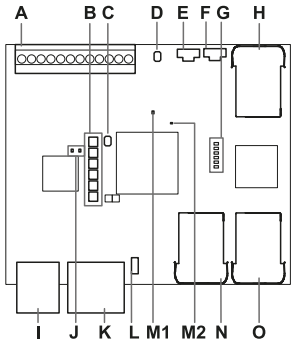

C201A model

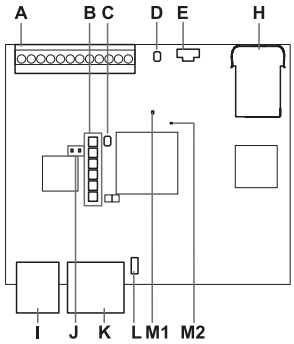

C202A model

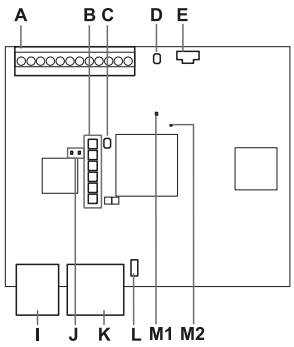

C203A model

Part	Description	C201A model	C202A model	C203A model
A	I/O terminal block	x	x	x
B	System status LEDs	x	x	x
C	Network parameter reset button / Factory reset button	x	x	x
D	Reserved for internal use. Output reset button	x	x	x
E	Micro-USB port (micro-B type) for connecting the PC and communicating with the system application	x	x	x
F	Micro-USB port, if mounted (reserved)	x	-	-
G	Fieldbus status LEDs See "Control units" on page 19 or "Control units" on page 19.	x	-	-
H	Ethernet port with LEDs for connecting the PC, communicating with the system application, and for MODBUS communication	x	x	-
I	Power supply terminal block	x	x	x
J	Power supply LEDs (steady green)	x	x	x
K	CAN bus terminal block for connecting the first sensor	x	x	x
L	DIP switch to turn on/off the bus termination resistance: • On (top position, default) = resistance included • Off (bottom position) = resistance excluded	x	x	x
M1	Status LED of hardware functions of the secondary micro-controller: • slow flashing orange: normal behavior • other status: contact Technical Support	x	x	x
M2	Status LED of hardware functions of the primary micro-controller: • off: normal behavior • steady red: contact Technical Support	x	x	x
N	Fieldbus port no. 1 with LEDs (PROFIsafe or FSoE IN)	x	-	-
O	Fieldbus port no.2 with LEDs (PROFIsafe or FSoE OUT)	x	-	-

***Note**: only for C201A-F and C201A-FX1: the processing direction is from the N connection to the O connection. In normal operation, the device receives the data from the controller on N and sends the outgoing data on O.*

5.1.3.2 Type B control units

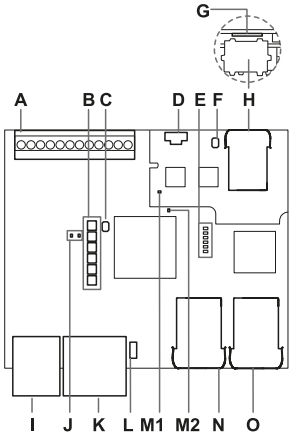

C201B model

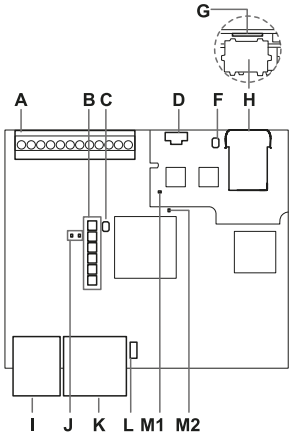

C202B model

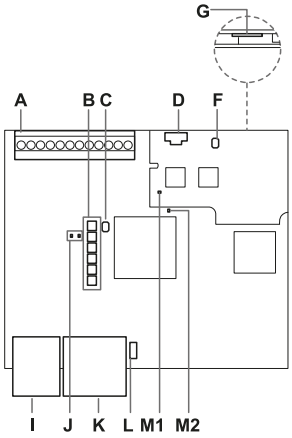

C203B model

Part	Description	C201B model	C202B model	C203B model
A	I/O terminal block	x	x	x
B	System status LEDs	x	x	x
C	Network parameter reset button / Factory reset button	x	x	x
D	Micro-USB port (micro-B type) for connecting the PC and communicating with the system application	x	x	x
E	Fieldbus status LEDs See "Control units" on page 19 or "Control units" on page 19.	x	-	-
F	SD Restore button	x	x	x
G	MicroSD slot	x	x	x

Part	Description	C201B model	C202B model	C203B model
H	Ethernet port with LEDs for connecting the PC, communicating with the system application, and for MODBUS communication	x	x	-
I	Power supply terminal block	x	x	x
J	Power supply LEDs (steady green)	x	x	x
K	CAN bus terminal block for connecting the first sensor	x	x	x
L	DIP switch to turn on/off the bus termination resistance: • On (top position, default) = resistance included • Off (bottom position) = resistance excluded	x	x	x
M1	Status LED of hardware functions of the secondary micro-controller: • slow flashing orange: normal behavior • other status: contact Technical Support	x	x	x
M2	Status LED of hardware functions of the primary micro-controller: • off: normal behavior • steady red: contact Technical Support	x	x	x
N	Fieldbus port no. 1 with LEDs (PROFIsafe, CIP Safety™ or FSoE IN)	x	-	-
O	Fieldbus port no.2 with LEDs (PROFIsafe, CIP Safety™ or FSoE OUT)	x	-	-

***Note**: only for C201B-F and C201B-FX1: the processing direction is from the N connection to the O connection. In normal operation, the device receives the data from the controller on N and sends the outgoing data on O.*

5.1.4 Control unit parameters

5.1.4.1 General parameter list

Parameter	Min	Max	Default value
Control unit channel	0	3	0
Digital input (for each input)	Not configured, Stop signal, Restart signal, Muting group 1, Muting group 2, Dynamic configuration switch, Fieldbus controlled, System recondition, Teach-In, Restart signal + System recondition, Single channel (Category 2), Anti-masking reference saving, Anti-rotation reference saving		Not configured
Digital input channel (for each channel of each input)	Not configured, Restart signal, Fieldbus controlled, System recondition, Restart signal + System recondition, Teach-In function		Not configured
Redundancy mode	Coherent, Inverted		Coherent
Encoded channel	Enabled, Disabled ***Note**: available only when both the digital inputs are configured as Dynamic configuration switch*		Disabled

Parameter	Min	Max	Default value
Pulse width (for each input)	0 µs (= Period and Phase shift disabled) 200 µs	2000 µs	0 µs
Period (for each input)	200 ms	2000 ms	200 ms
Phase shift (for each input)	0.4 ms	1000 ms	0.4 ms
Stop signal debounce filter	Enabled, Disabled		Disabled
Digital output (for each output)	Not configured, System diagnostic signal, Muting enable feedback signal, Fieldbus controlled, Restart feedback signal, Detection signal "N", Detection warning "N", Static object detection feedback signal, Detection signal group 1, Detection signal group 2, Detection warning group 1, Detection warning group 2, Teach-In feedback signal		Not configured
OSSD Pulse width	Short (300 µs), Long (2 ms)		Short (300 µs)
Short-circuit/Open circuit diagnostics	Enabled, Disabled		Disabled
Electromagnetic robustness	Standard, High, Very High		Standard
Static object detection sensitivity	-20 dB	+20 dB	0 dB
Corridor width (**c**)	300 mm	5000 mm	0 (Disabled)
Horizontal angular coverage (**β**)	10 degrees	40 degrees	40 degrees
Offset (**o**)	100 mm	1000 mm	200 mm
Max distance (**Dmax**)	300 mm	5000 mm	5000 mm
Log verbosity level	0	5	0
Automatic backup creation	Enabled, Disabled		Disabled
Users data included	Enabled, Disabled		Disabled
Enable restore by button	Enabled, Disabled		Enabled

For sensor configuration parameters, see "Appendix A: sensor lines" on page 149.

5.1.4.2 Teach-In function parameter list

Parameter	Min	Max	Default value
Corridor width (**c**)	300 mm	5000 mm	0 (Disabled)
Horizontal angular coverage (**β**)	10 degrees	40 degrees	40 degrees
Offset (**o**)	100 mm	1000 mm	200 mm
Max distance (**Dmax**)	300 mm	5000 mm	5000 mm

5.1.5 Target position angle conventions

5.1.5.1 Horizontal angle

The horizontal angle of the target position is reported according to the following convention:

- the angle has a positive (+) sign when the target is on the sensor's left side.
- the angle has a negative (-) sign when the target is on the sensor's right side.

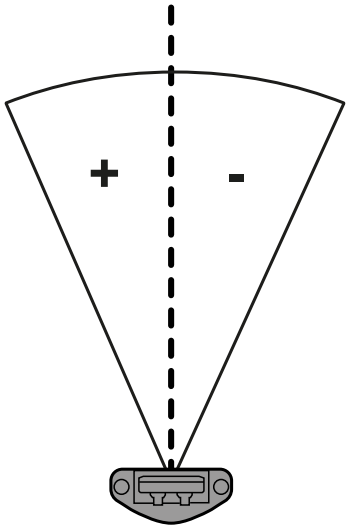

5.1.5.2 Vertical angle

The vertical angle of the target position is reported according to the following convention:

- the angle has a positive (+) sign when the target is above the center of the sensor.
- the angle has a negative (-) sign when the target is below the center of the sensor.

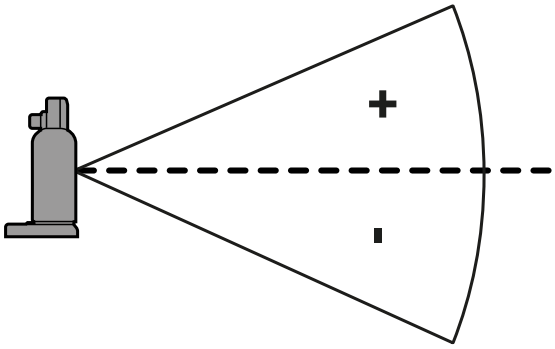

5.1.6 Separation distance calculation

5.1.6.1 Introduction

The formula used to calculate the separation distance is compliant with the ISO 13855:2024 standard and is described in the sections below.

5.1.6.2 Stationary application

To calculate the separation distance, the integrator should take into consideration the following parameters:

- H_{VT}: height of the upper edge of the detection volume from the reference plane
- H_{VB}: height of the lower edge of the detection volume from the reference plane

The sensor should be installed such that H_{VT} and H_{VB} are sufficient to ensure the proper detection of people as determined by the risk analysis.

The overall separation distance S can be calculated as:

$$S = K * T + D_{DS} + Z_G$$

Where:

Variable	Description
K	Maximum approach speed. It is considered to be 1600 mm/s because RPDs are body protection devices. This is consistent with the definition of approach speed of ISO 13855:2024.
T	Overall system response time in *s**
D_{DS}	Reaching distance
Z_G	Supplemental distance factor in *mm*. The tolerance zone is already considered in the provided detection distance as expressed in IEC TS 61496-5. No corrective values for the tolerance zone need to be added to the calculation of the separation distance.

Note*: *it includes time intervals that vary depending on the machinery type, safeguard(s) applied, and elements of the SRP/CS involved in the safety function. When using Fieldbus, the computation of the overall response time should consider the cycle time.*

The separation distance value can be calculated depending on the height of H_{VT} :

- for H_{VT} ≥ 900 mm approach is considered orthogonal, see "Separation distance calculation: HVT ≥ 900 mm" below
- for H_{VT} < 900 mm approach is considered parallel, see "Separation distance calculation: HVT < 900 mm" on the next page

5.1.6.3 Separation distance calculation: H_{VT} ≥ 900 mm

For H_{VT} ≥ 900 mm approach is considered orthogonal.

The separation distance should be calculated in accordance with clause 8 of ISO 13855:2024.

The following considerations are valid:

- For *reaching over D_{DO}* (clause 8.2 of ISO 13855:2024), H_{DT} should be considered equivalent to H_{VT}.
- For *reaching through D_{DT}* (clause 8.3 of ISO 13855:2024), a detection capability of 55 mm < d_e ≤ 120 mm or higher should be considered.
- For *reaching under D_{DU}* (clause 8.4 of ISO 13855:2024), H_{DB} should be considered equivalent to H_{VB}.

Example

- T = 0.1 s + 0.4 s = 0.5 s
- H_{VB} = H_{DB} = 180 mm
- H_{VT} = H_{DT} = 1000 mm
- H_H = 600 mm
- Z_G = 0 mm

According to clauses 8.2, 8.3, and 8.4, respectively, of ISO 13855:2024:

- D_{DO} = 950 mm
- D_{DT} = 850 mm
- D_{DU} = 750 mm
- D_{DS} = max(D_{DO}, D_{DT}, D_{DU})

According to these values, the overall separation distance is:

S = K x T + D_{DS} + Z_G = K x T + max(D_{DO}, D_{DT}, D_{DU}) + ZG = 1600 x 0.5 + max(950, 850, 750) + 0 = 1750 mm

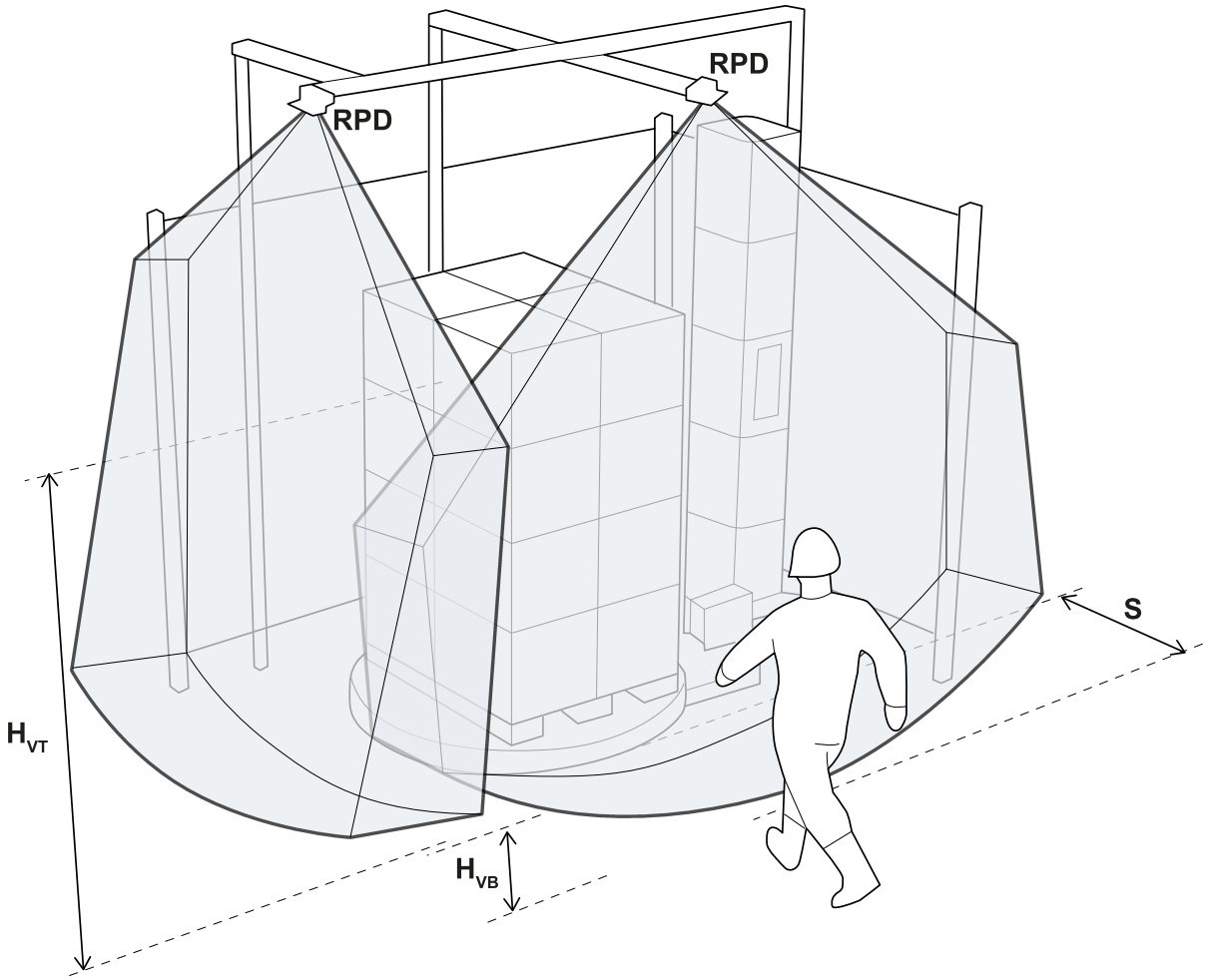

5.1.6.4 Separation distance calculation: H_{VT} < 900 mm

For H_{VT} < 900 mm approach is considered parallel.

The separation distance should be calculated in accordance with clauses 9.3 and 9.4 of ISO 13855:2024.
The following considerations are valid:

- H_{VB} should not be greater than 200 mm
- H_{VT} should not be greater than 900 mm

Example

- T = 0.1 s + 0.4 s = 0.5 s
- $H_{VB} = H_{DB}$ = 150 mm
- H_{VT} = 800 mm
- $G_D \geq 70$ mm
- $F_D \geq 1200$ mm according to clause 9.4 of ISO 13855:2024
- Z_G = 0 mm

According to the formula in clause 9.3 of ISO 13855:2024:

- D_{DS} = 1200 mm

According to these values, the overall separation distance is:
$S = K \times T + D_{DS} + Z_G = 1600 \times 0.5 + 1200 + 0 = 2000$ mm

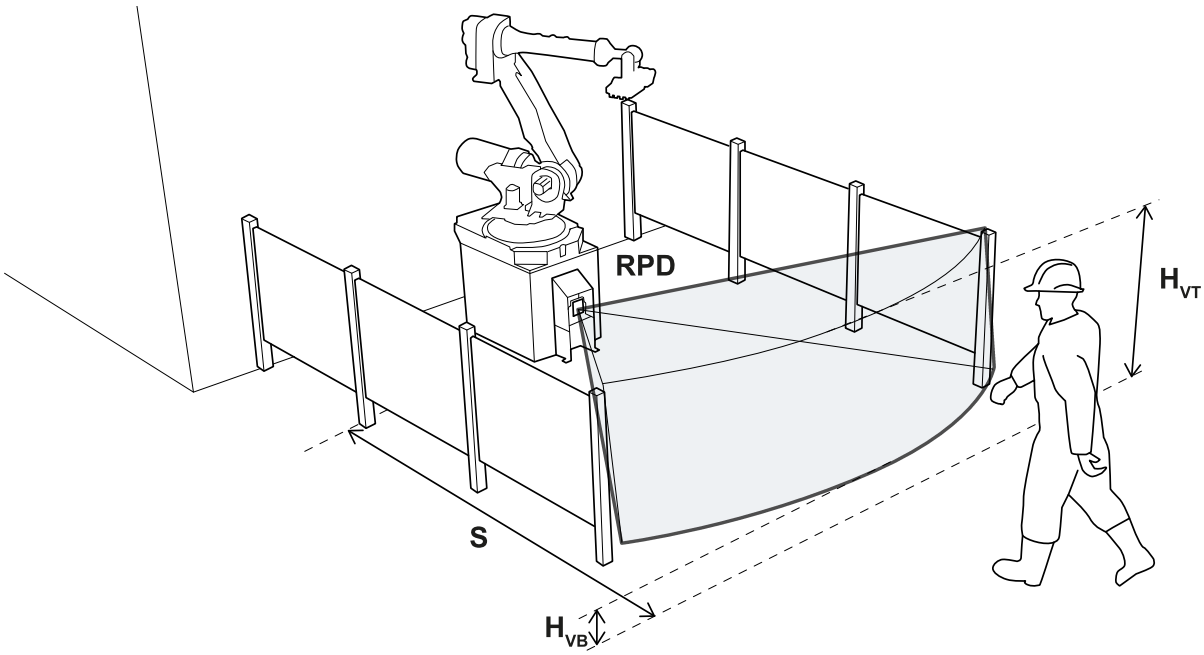

5.1.6.5 Mobile application

For mobile applications, the separation distance should be calculated in accordance with ISO 13855:2024.

The supplemental distance factor of the Inxpect SRE 200 Series is 200 mm. In accordance with the ISO 13855:2024, additional supplemental distance factors need to be considered.

The overall separation distance S can be calculated as:

$$S = K * T + D_{DS} + Z_G$$

Where:

Variable	Description
K	Maximum vehicle/part of the machinery speed*. • For detection distance ≤ 4 m (13.12 ft): K ≤ 3000. • For detection distance > 4 m (13.12 ft): K ≤ 2000.
T	Overall system response time in *s***
D_{DS}	Reaching distance
Z_G	Supplemental distance factor in *mm*.

Note*: *only the speed of the vehicle or of the part of machinery is considered. This is based on the assumption that the person recognizes the hazard and stands still.*

Note**: *it includes time intervals that vary depending on the machinery type, safeguard(s) applied, and elements of the SRP/CS involved in the safety function. When using Fieldbus, the computation of the overall response time should consider the cycle time.*

Example

- T = 0.1 s + 0.4 s = 0.5 s
- Z_G = 200 mm

According to these values, the overall separation distance is:

S = K x T + D_{DS} + Z_G = 2000 x 0.5 + 0 + 200 = 1200 mm

5.2 Electrical installation

Contents

This section includes the following topics:

5.2.1 Terminal blocks and connector pin-outs **139**
5.2.2 Electrical connections **141**

5.2.1 Terminal blocks and connector pin-outs

5.2.1.1 Digital inputs and outputs terminal block

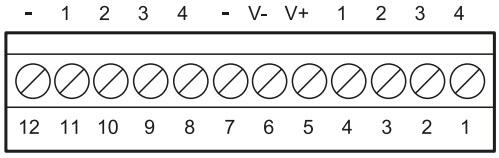

***Note**: facing the control unit so that the terminal block is on the top left, number 12 is the closest to the control unit corner.*

Terminal block	Symbol	Description	Pin
Digital In	**4**	Input 2, Channel 2, 24 V DC type 3 - INPUT #2-2	1
	3	Input 2, Channel 1, 24 V DC type 3 - INPUT #2-1	2
	2	Input 1, Channel 2, 24 V DC type 3 - INPUT #1-2	3
	1	Input 1, Channel 1, 24 V DC type 3 - INPUT #1-1	4
	V+	V+ (SNS), 24 V DC for diagnostics of the digital inputs (mandatory if at least one input is used)	5
	V-	V- (SNS), common reference for all digital inputs (mandatory if at least one input is used)	6
Digital Out	**-**	GND, common reference for all digital outputs	7
	4	Output 4 (OSSD4)	8
	3	Output 3 (OSSD3)	9
	2	Output 2 (OSSD2)	10
	1	Output 1 (OSSD1)	11
	-	GND, common reference for all digital outputs	12

***Note**: the cables used must have a maximum length of 30 m (98.4 ft) and the maximum operating temperature must be at least 80 °C.*

***Note**: use only copper wires with a minimum gauge of 18 AWG and a torque of 0.62 Nm (5.5 lbs in).*

5.2.1.2 Voltage and current limits for digital inputs

The digital inputs (input voltage 24 V DC) adhere to the following voltage and current limits, in accordance with standard IEC/EN 61131-2:2003.

	Type 3
Voltage limits	
0	from - 3 to 11 V
1	from 11 to 30 V
Current limits	
0	15 mA
1	from 2 to 15 mA

5.2.1.3 Power supply terminal block

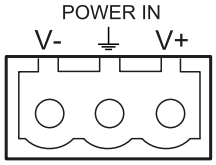

***Note**: connector front view.*

Symbol	Description
V-	GND
⏚	Earth
V+	+ 24 V DC

***Note**: the maximum operating temperature of the cables must be at least 70 °C.*

***Note**: use only copper wires with a minimum gauge of 18 AWG and a torque of 0.62 Nm (5.5 lbs in).*

5.2.1.4 CAN bus terminal block

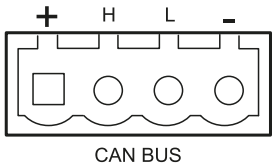

Symbol	Description
+	+ 12 V DC output
H	CAN H
L	CAN L
-	GND

***Note**: the maximum operating temperature of the cables must be at least 70 °C.*

5.2.1.5 Connectors M12 CAN bus

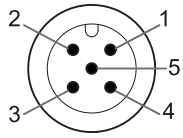

Male connector

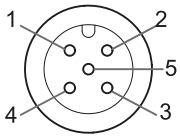

Female connector

Pin	Function
1	Shield to be connected to the functional earth on the power supply terminal block of the control unit.
2	+12 V dc
3	GND
4	CAN H
5	CAN L

5.2.2 Electrical connections

5.2.2.1 Connection of safety outputs to the Programmable Logic Controller

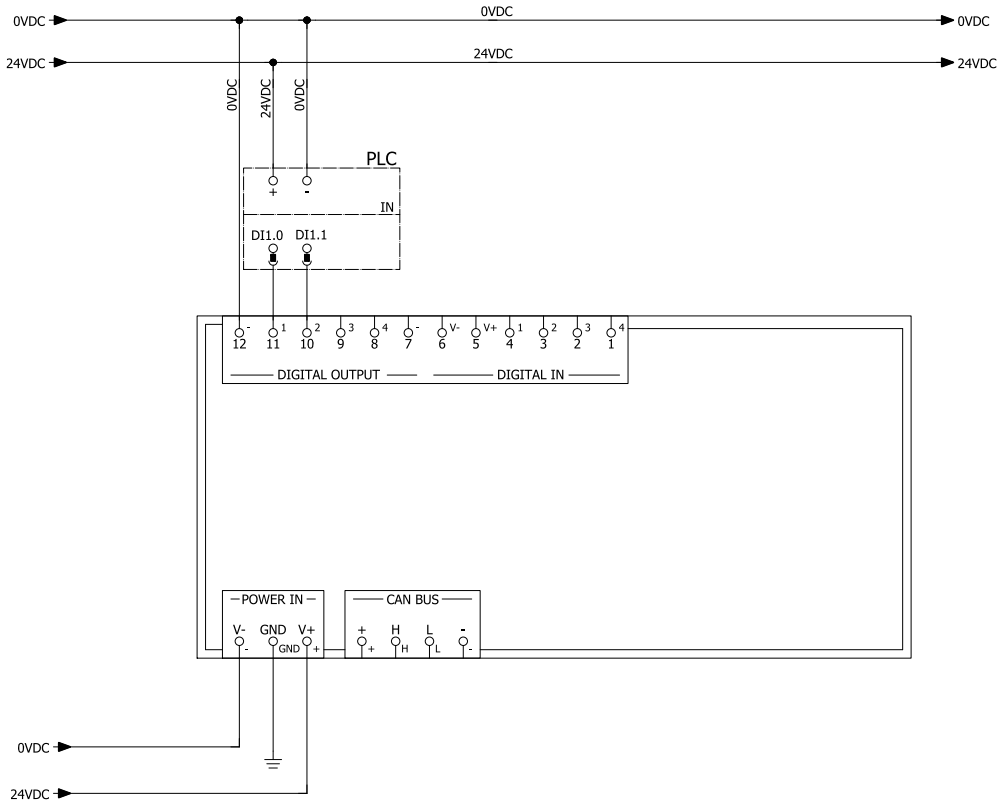

Digital I/O settings (via the system application)

Digital input #1 Not configured

Digital input #2 Not configured

Digital output #1 Detection signal 1

Digital output #2 Detection signal 1

Digital output #3 Not configured

Digital output #4 Not configured

5.2.2.2 Connection of safety outputs to an external safety relay

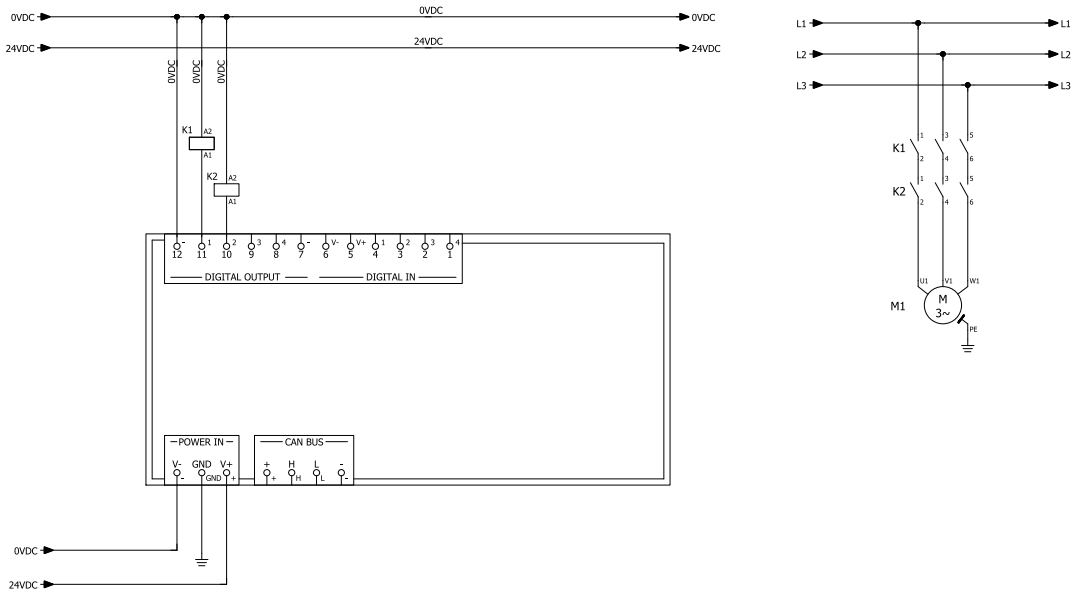

Digital I/O settings (via the system application)

Digital input #1 Not configured
Digital input #2 Not configured
Digital output #1 Detection signal 1
Digital output #2 Detection signal 1
Digital output #3 Not configured
Digital output #4 Not configured

5.2.2.3 Connection of stop signal (Emergency button)

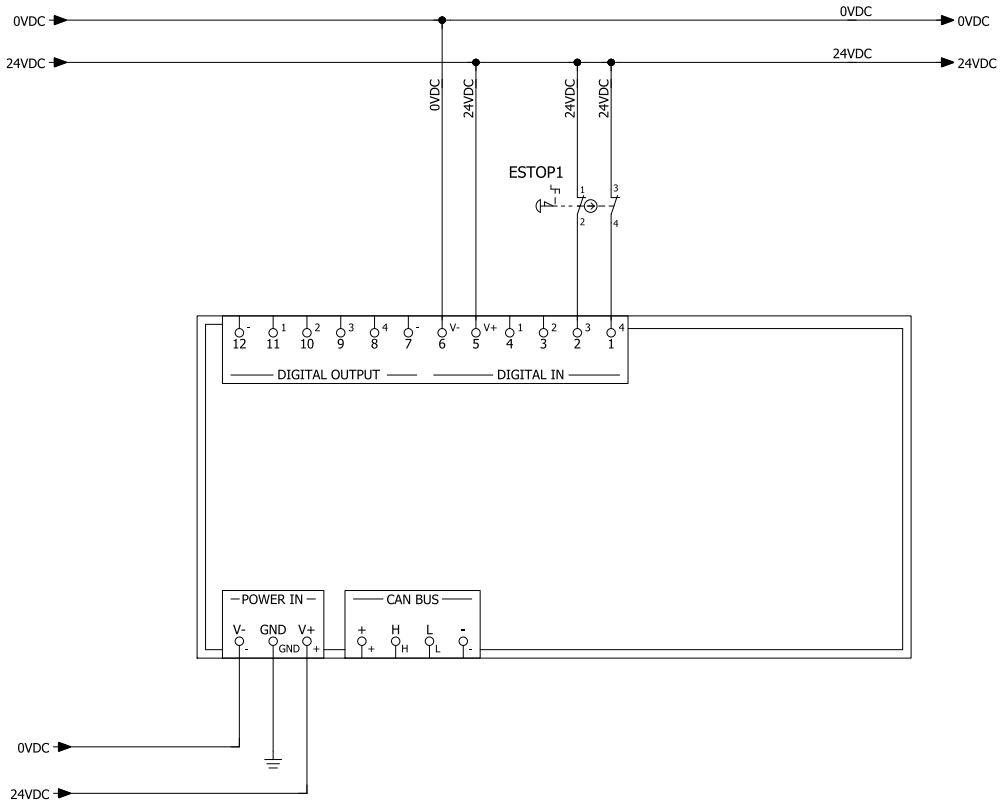

***Note**: the indicated emergency button opens the contact when pressed.*

***Note**: the cables used for wiring the digital inputs must have a maximum length of 30 m (98.4 ft).*

Digital I/O settings (via the system application)

Digital input #1 Not configured

Digital input #2 Stop signal

Digital output #1 Not configured

Digital output #2 Not configured

Digital output #3 Not configured

Digital output #4 Not configured

5.2.2.4 Connection of restart signal (dual channel)

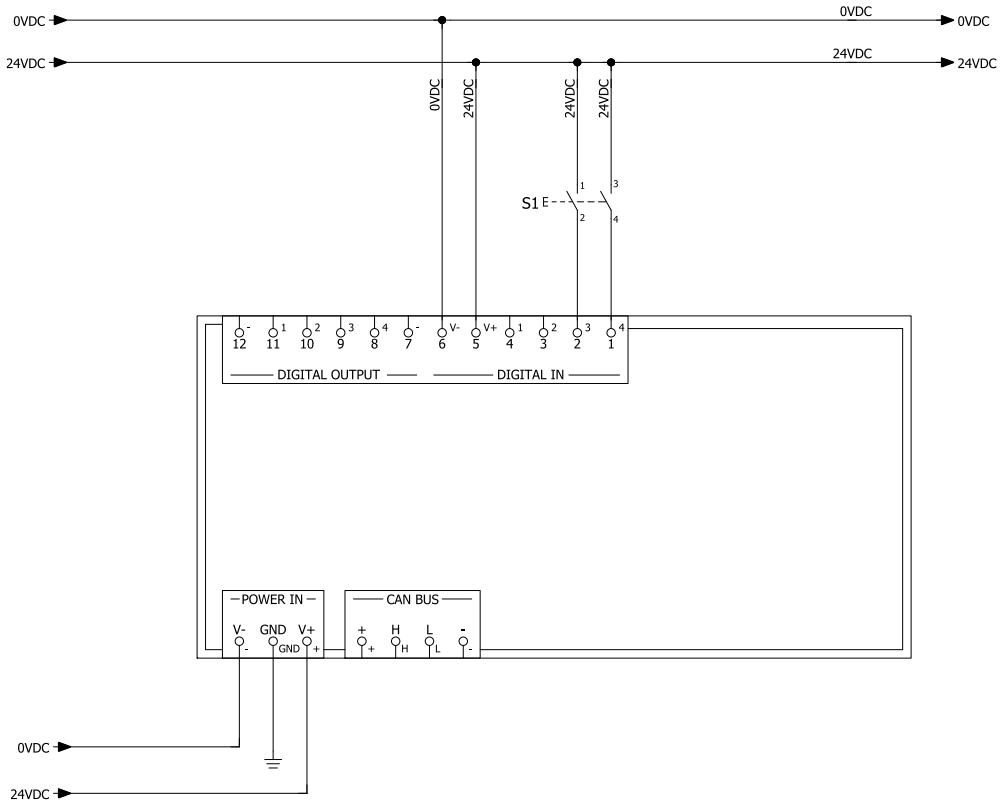

***Note**: the button indicated for the restart signal closes the contact when pressed.*

***Note**: the cables used for wiring the digital inputs must have a maximum length of 30 m (98.4 ft).*

Digital I/O settings (via the system application)

Digital input #1 Not configured

Digital input #2 Restart signal

Digital output #1 Not configured

Digital output #2 Not configured

Digital output #3 Not configured

Digital output #4 Not configured

5.2.2.5 Connection of the muting input and output (one group of sensors)

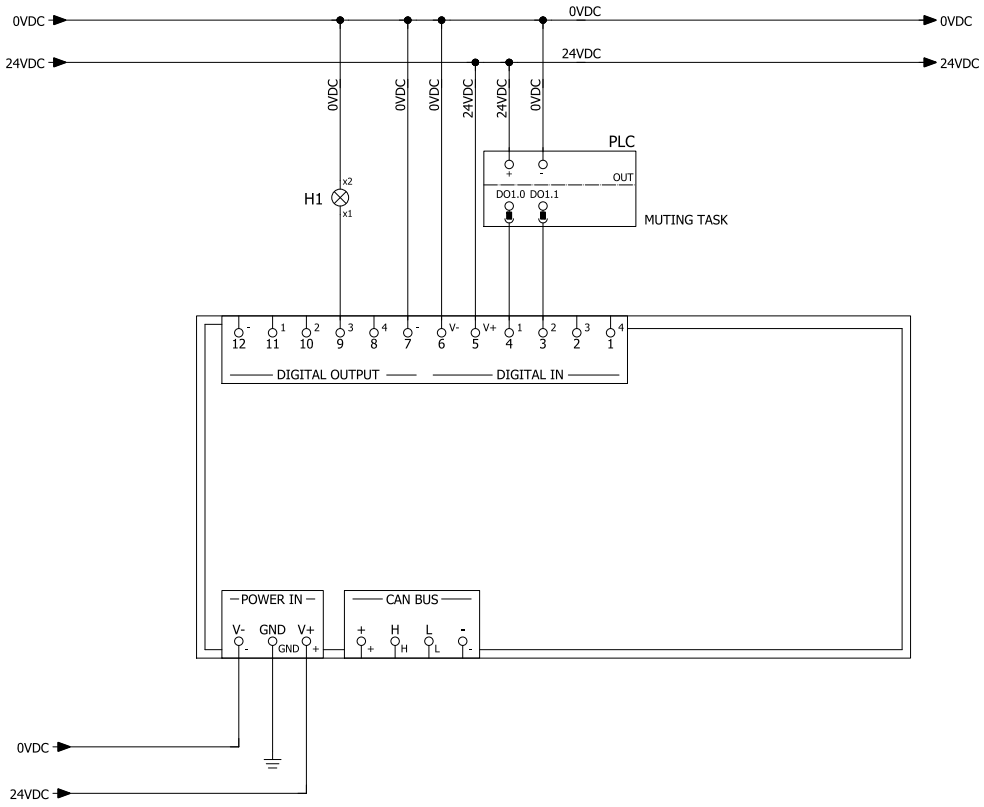

***Note**: the cables used for wiring the digital inputs must have a maximum length of 30 m (98.4 ft).*

Digital I/O settings (via the system application)

Digital input #1 Muting group 1
Digital input #2 Not configured
Digital output #1 Not configured
Digital output #2 Not configured
Digital output #3 Muting enable feedback signal
Digital output #4 Not configured

5.2.2.6 Connection of the muting input and output (two groups of sensors)

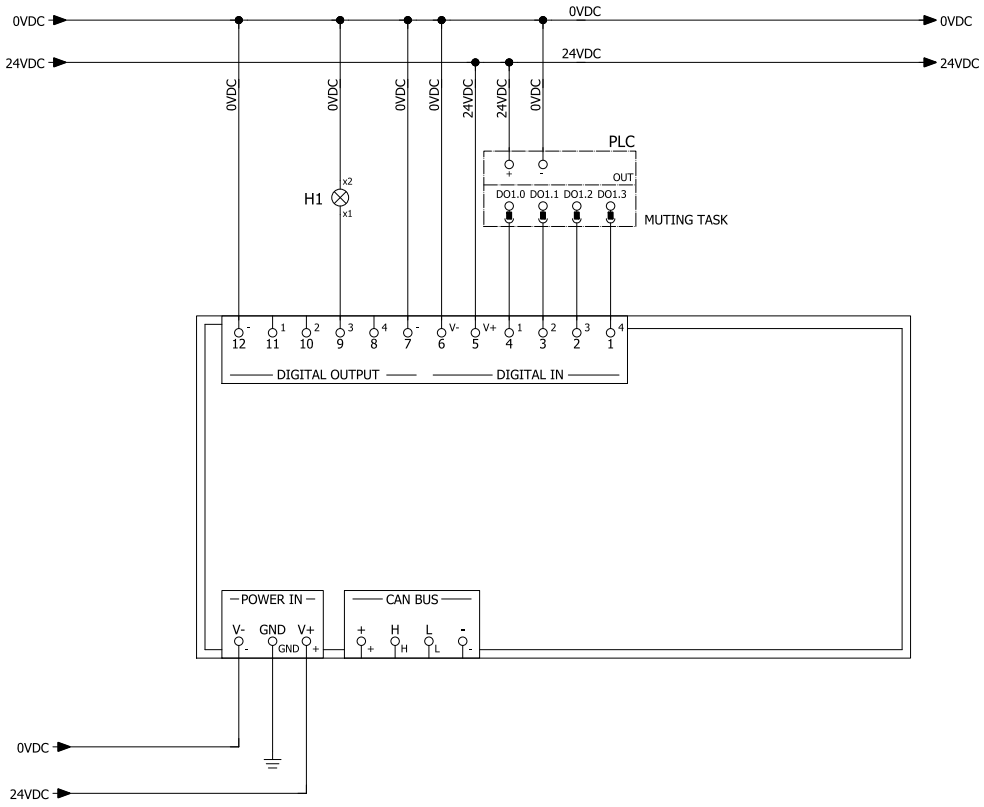

***Note**: the cables used for wiring the digital inputs must have a maximum length of 30 m (98.4 ft).*

Digital I/O settings (via the system application)

Digital input #1 Muting group 1
Digital input #2 Muting group 2
Digital output #1 Not configured
Digital output #2 Not configured
Digital output #3 Muting enable feedback signal
Digital output #4 Not configured

5.2.2.7 Detection signal 1 and 2 connection

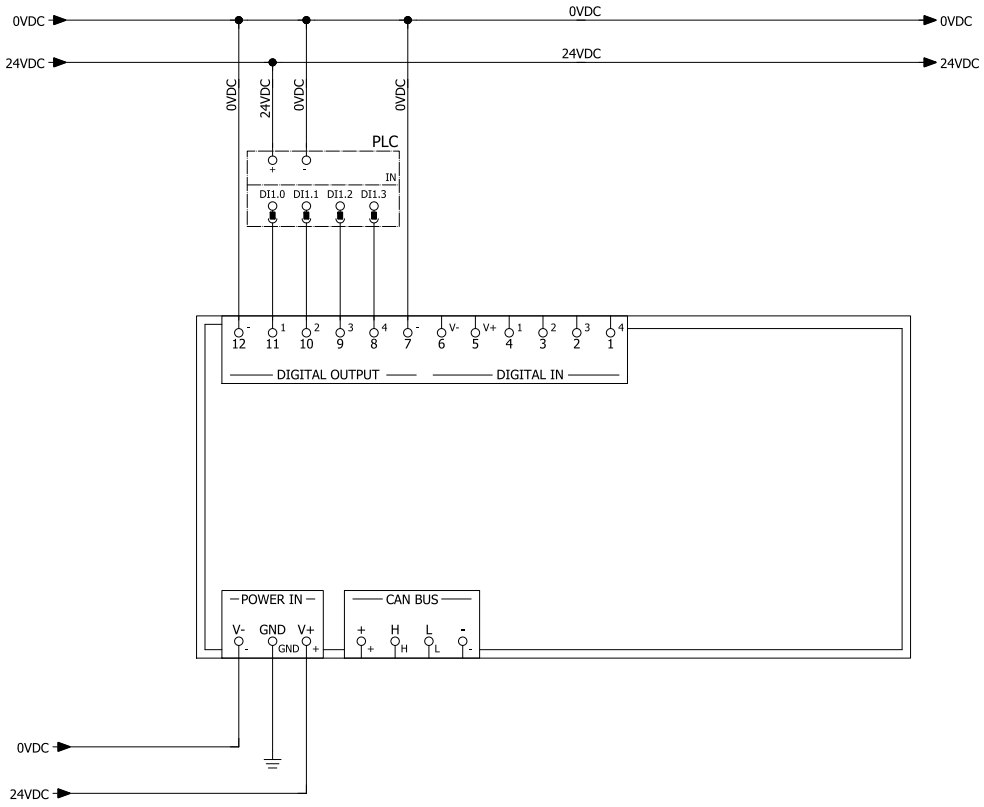

Digital I/O settings (via the system application)

Digital input #1 Not configured
Digital input #2 Not configured
Digital output #1 Detection signal 1
Digital output #2 Detection signal 1
Digital output #3 Detection signal 2
Digital output #4 Detection signal 2

5.2.2.8 Diagnostic output connection

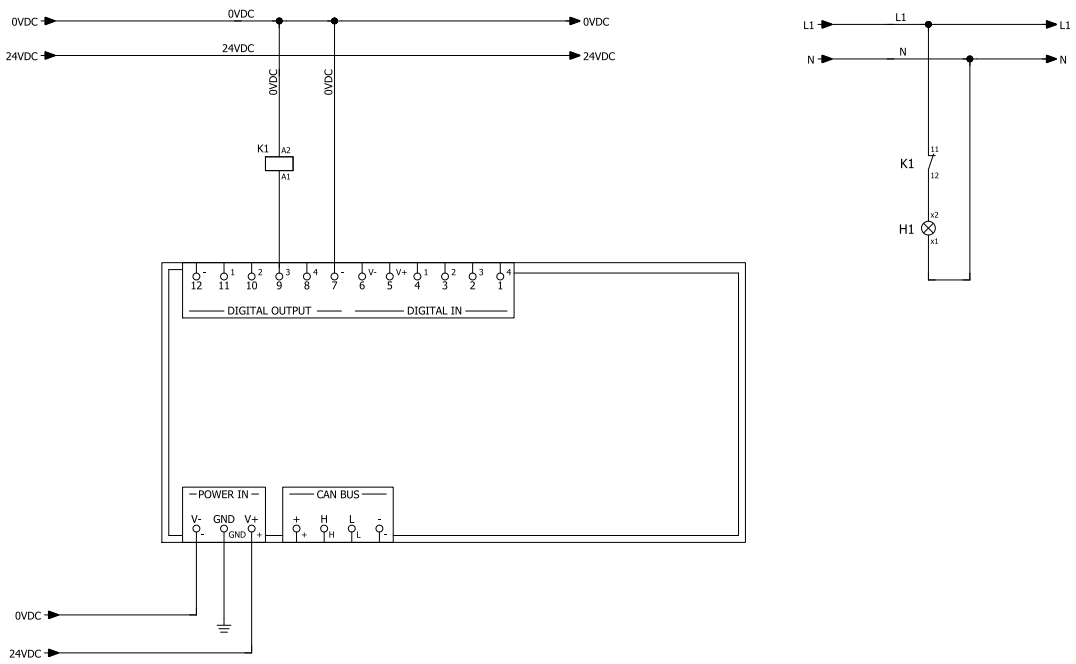

***Note**: the cables used for wiring the digital inputs must have a maximum length of 30 m (98.4 ft).*

Digital I/O settings (via the system application)

Digital input #1 Not configured
Digital input #2 Not configured
Digital output #1 Not configured
Digital output #2 Not configured
Digital output #3 System diagnostic signal
Digital output #4 Not configured

6. Appendix A: sensor lines

6.1 Core line sensors: S201A

Contents

This section includes the following topics:

6.1.1 Main features **149**
6.1.2 Sensor field of view **150**
6.1.3 Installation recommendations for the stationary application **152**
6.1.4 Installation recommendations for the mobile application **154**
6.1.5 Range of distances **155**
6.1.6 Configuration parameters **156**

6.1.1 Main features

6.1.1.1 Feature list

Model-type	S201A
Compatible control unit production line	Core Line eXtended Line
Safety function managed	Access detection Restart prevention
Safety working modes	Access detection and restart prevention Always-on access detection Always-on restart prevention
Application	Stationary Mobile Vehicle
Outdoor installation	Yes
Configuration tool	Inxpect Safety
Access detection speed limit (stationary application)	Min: 0.1 m/s (0.33 ft/s) Max: 1.6 m/s (5.25 ft/s)
Access detection speed limit* (mobile application)	For detection distance less than or equal to 4 m (13.12 ft): • Min: 0.1 m/s (0.33 ft/s) • Max: 3 m/s (9.84 ft/s) For detection distance greater than 4 m: • Min: 0.1 m/s (0.33 ft/s) • Max: 2 m/s (6.56 ft/s)
Dynamic configuration available	Up to 32**
Static object detection option	Yes

Note*: only the speed of the vehicle or of the part of machinery is considered. This is based on the assumption that the person recognizes the hazard and stands still.*

Note**: for limitations that reduce the maximum number of dynamic configurations, see "Dynamic configuration presets" on page 36.*

6.1.2 Sensor field of view

6.1.2.1 Dimensions

Below are the maximum field of view dimensions **[A]** and the relative gray area **[B]**.

The gray area dimensions are the same for maximum angular coverage (as described in the figures below) and smaller coverages.

***Note**: the gray area dimensions described are related to the detection of humans.*

Access detection function

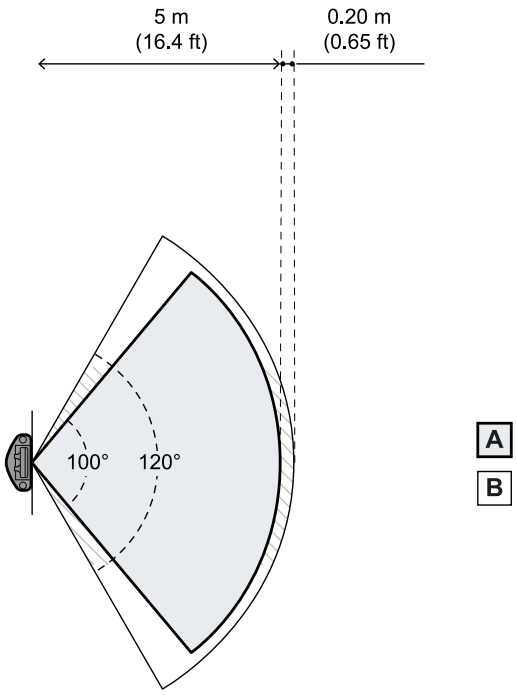

Top view

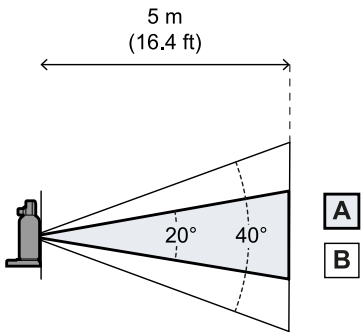

Side view

Restart prevention function

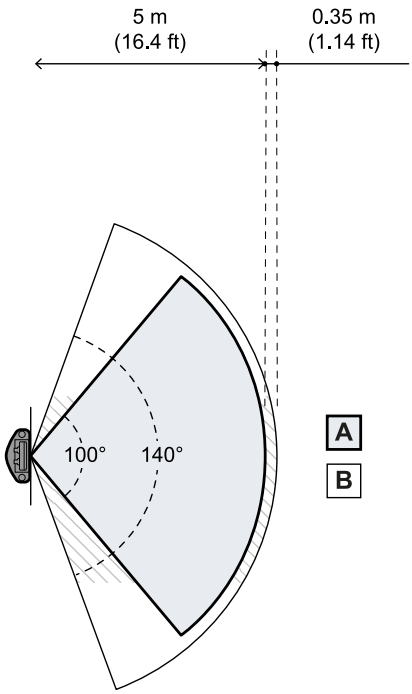

Top view

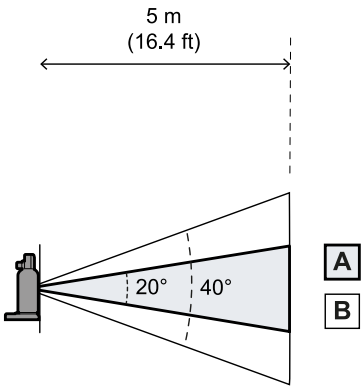

Side view

6.1.2.2 Position of the field of view

The field of view is tilted 2.5°

To understand the actual position of the sensor field of view consider the LED position:

- left with sensor LED on the right (with respect to the sensor center, facing the sensor)
- right with sensor LED on the left (with respect to the sensor center, facing the sensor)
- downward with sensor LED up

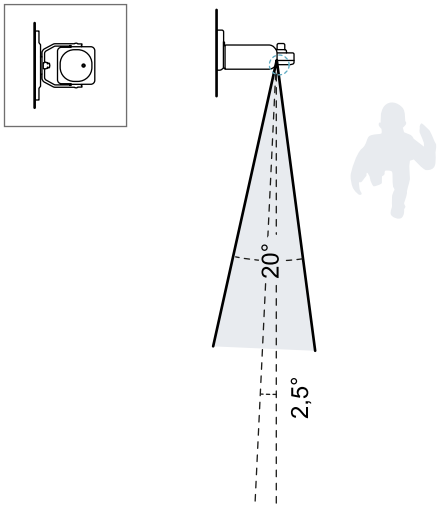

Top view with sensor inclination 0°.

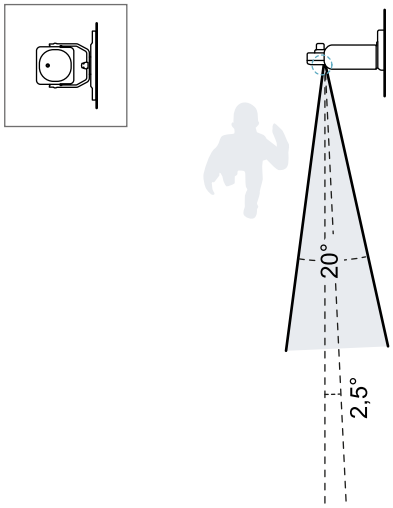

Top view with sensor inclination 0°.

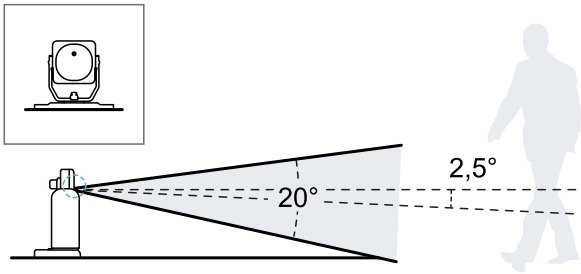

Side view with sensor inclination 0°.

6.1.3 Installation recommendations for the stationary application

6.1.3.1 For access detection function

WARNING! Take all necessary precautions to prevent people from climbing over and entering the area, whenever there is that risk.

Below are some recommendations for the sensor positioning for the access detection function:

- If the distance between the ground and the bottom portion of the field of view is greater than 20 cm (7.9 in), take precautions to make sure that even a person entering the dangerous area below the volume monitored by the field of view is still detected.
- The installation height (from the ground to the center of the sensor) must be greater than or equal to 15 cm (5.9 in).
- If the height above the ground is less than 20 cm (7.9 in), install the sensor with an inclination of minimum 10° upwards.

For access control of an entrance

If the sensor is used in access detection for monitoring a pedestrian entry in a confined area, the recommendations below should be taken into consideration:

- The installation height (from the ground to the center of the sensor) must be greater than or equal to 20 cm (7.9 in).
- The horizontal angular coverage must be 90°.
- The rotation around the x-axis must be 90°.
- The inclination must be 40° upwards.

Below is an example:

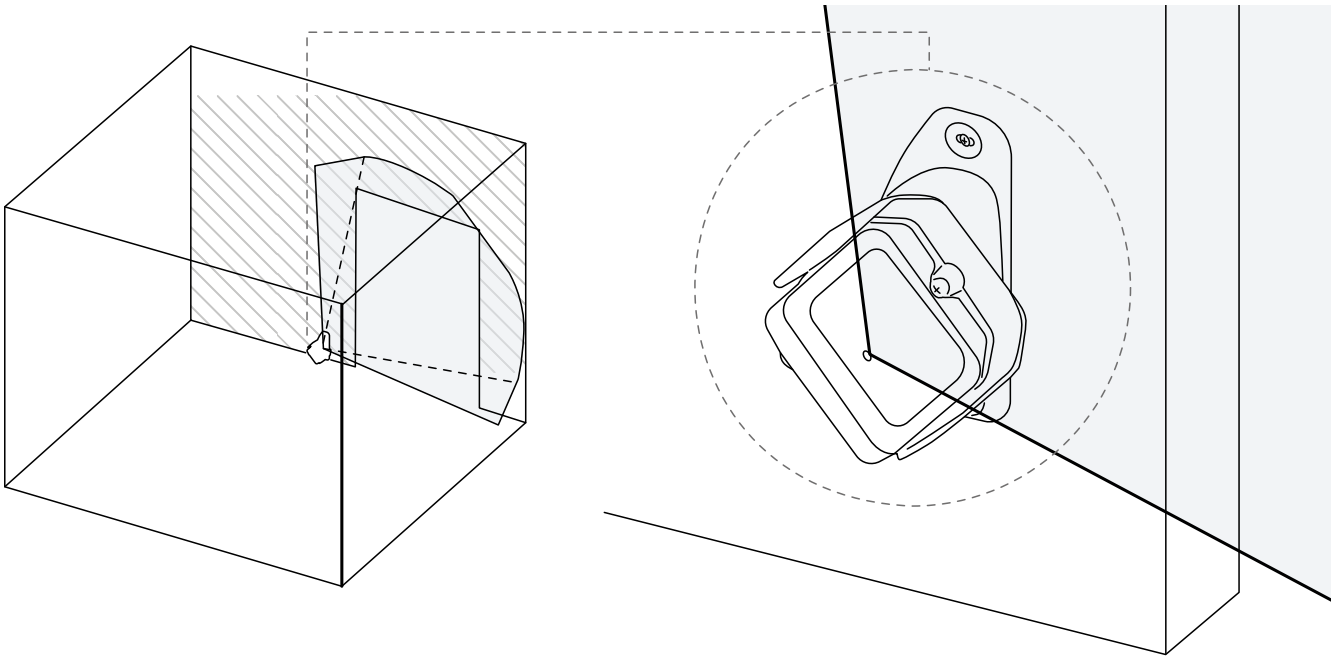

WARNING! The horizontal angular coverage in the first 800 mm (31.5 in) of the field of view must be at least 60°. If this specification cannot be respected, take precautions to avoid the access of a human in the first 800 mm (31.5 in) of the field of view.

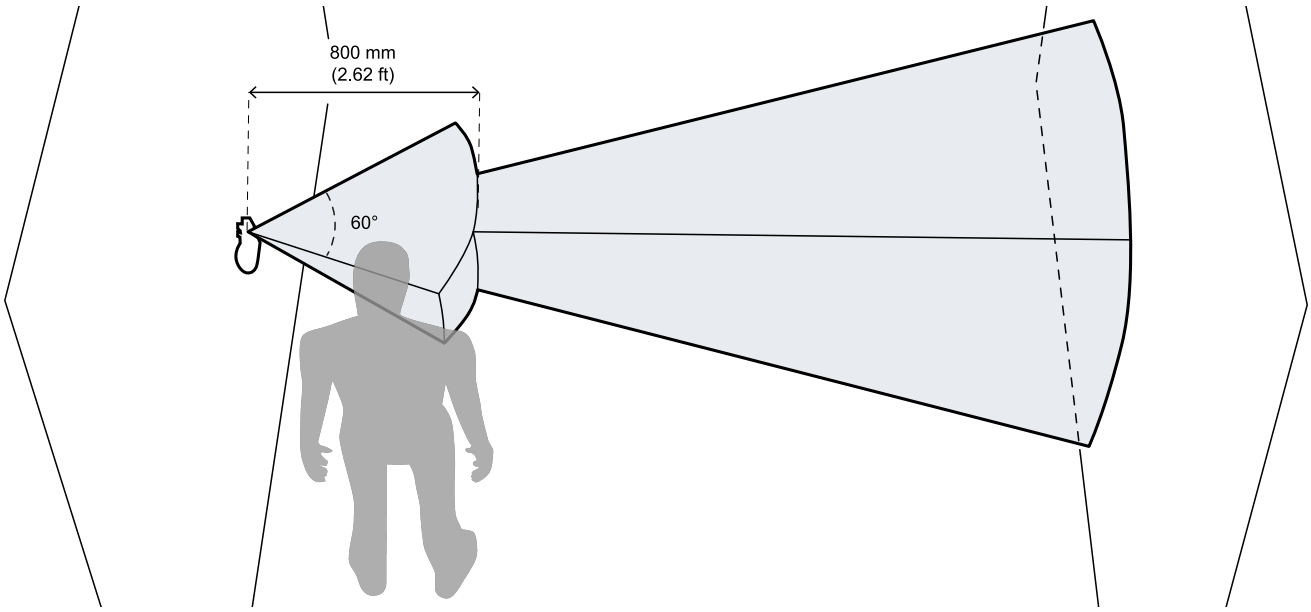

6.1.3.2 For restart prevention function

Below are some recommendations for the sensor positioning for the restart prevention function:

- The installation height (from the ground to the center of the sensor) must be greater than or equal to 15 cm (5.9 in).
- If the height above the ground is less than 20 cm (7.9 in), install the sensor with an inclination of minimum 10° upwards.

The restart prevention function is effective if the sensor can detect a person's movements or their static residual movements in radial directions. To detect people who are not standing or squatting, it is important that the sensor can clearly detect the person's chest.

Particular attention should be paid to the following situations:

- There are objects that limit or prevent the sensor from detecting motion.
- The sensor does not detect a sufficient portion of the body or does not properly detect the person's chest.
- The risk assessment requires the detection of a person lying down, and the sensor is installed at a height below 2.5 m (8.2 ft) or with an inclination lower than 60° downwards

A validation procedure (see "Validate the safety functions" on page 75) must be performed when one or more of the above conditions are met.

If the conditions described above limit the performance of the sensor, take the following steps to reach an appropriate level of performance:

- Increase the **Restart timeout** parameter.
- Change the position of the sensors.
- Add more sensors.

If one or more of the above actions are taken, it is recommended to perform a validation procedure (see "Validate the safety functions" on page 75).

Below are some examples of situations where the above conditions are met (✓) or not met (X). These examples are not meant to be exhaustive.

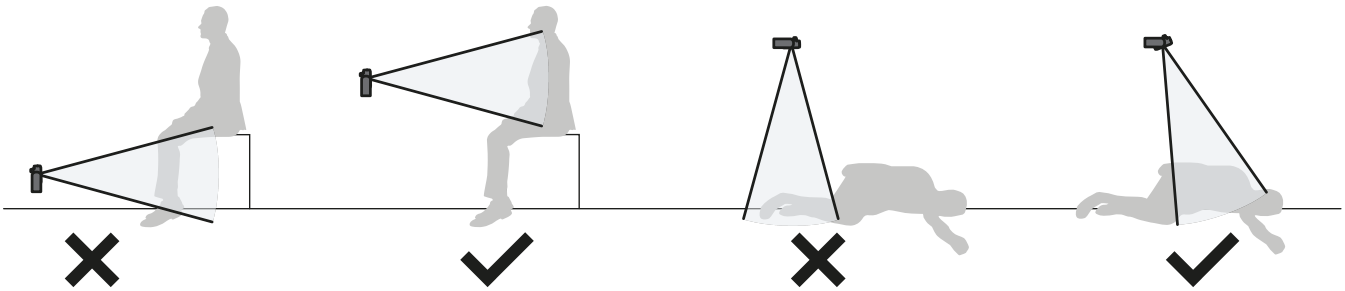

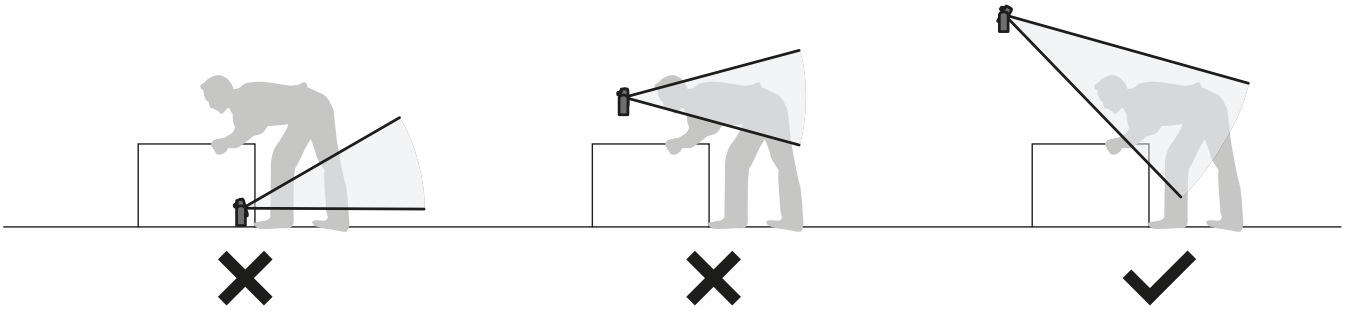

6.1.3.3 For outdoor application

The recommendations reported above for access detection and restart prevention functions remain valid in outdoor environments.

Before installing a sensor facing downwards, make sure there are neither liquids nor radar reflective materials on the floor.

Position exposed to precipitation

If the sensor installation position might be exposed to precipitation that can cause undesired alarms, it is recommended to take the following precautions:

- Make a cover to protect the sensor from rain, hail, or snow, so that water droplets do not fall directly on the sensor.
- Position the sensor so that it does not frame the ground where puddles might form.

NOTICE: *Weather conditions outside specifications can prematurely age the device.*

If the monitored area is free of static objects, the system can withstand rainfall up to 45 mm/h.

Recommendations for covering the sensor

Below are some recommendations for creating and installing a sensor cover:

- height from sensor: 15 cm (6 in)
- width: minimum 30 cm (11.8 in), maximum 40 cm (15.7 in)
- protrusion from the sensor: minimum 15 cm (6 in), maximum 20 cm (7.9 in)
- water outflow: at the sides or behind but not in front of the sensor (the cover should be arched and/or tilted backwards)

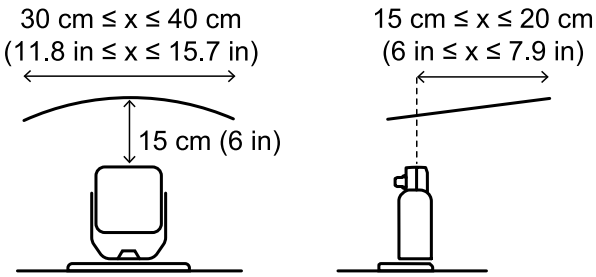

Position not exposed to precipitation

If the installation position of the sensor is not exposed to precipitation, no special precautions are required.

6.1.4 Installation recommendations for the mobile application

6.1.4.1 General recommendations

In mobile applications, the sensor moves with the vehicle or moving machinery parts.

Below are some recommendations for defining the sensor position:

- position the sensor so the floor is excluded from its detection field to avoid undesired alarms
- installation height (from the ground to the center of the sensor): minimum 15 cm (5.9 in)
- suggested inclination: minimum 15°

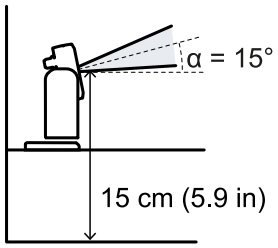

6.1.4.2 For outdoor application

The general recommendations reported above remain valid in outdoor environments.

Before installing a sensor facing downwards, make sure there are neither liquids nor radar reflective materials on the floor.

Position exposed to precipitation

If the sensor installation position might be exposed to precipitation that can cause undesired alarms, it is recommended to take the following precautions:

- Make a cover to protect the sensor from rain, hail, or snow, so that water droplets do not fall directly on the sensor.
- Position the sensor so that it does not frame the ground where puddles might form.

NOTICE: *Weather conditions outside specifications can prematurely age the device.*

If the monitored area is free of static objects, the system can withstand rainfall up to 45 mm/h.

Position not exposed to precipitation

If the installation position of the sensor is not exposed to precipitation, no special precautions are required.

6.1.5 Range of distances

6.1.5.1 Introduction

The detection distances at which the human body is guaranteed to be detected depend on the inclination of the sensor. Below are the three possible configurations and the relative detection distance ranges (**D1** = start detection distance, **D2** = end of detection distance).

Note*: these distance ranges are only valid for fields of view with classic shapes.*

6.1.5.2 Installation configurations

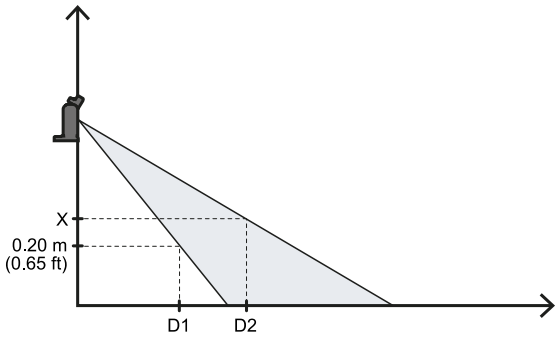

Both the upper portion and the bottom portion of the field of view always intersect the ground.

D1 = projection on the reference plane of the intersection point of the field of view at a height of 0.2 m (6.56 ft)

D2 = projection on the reference plane of the intersection point of the field of view at height X (where "X" is 0.6 m (19.68 ft))

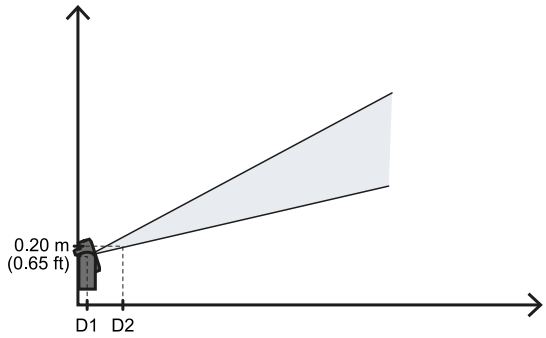

The field of view of the sensor never intersects the ground

D1 = 0

D2 = projection on the reference plane of the intersection point of the field of view at a height of 0.2 m (6.56 ft)

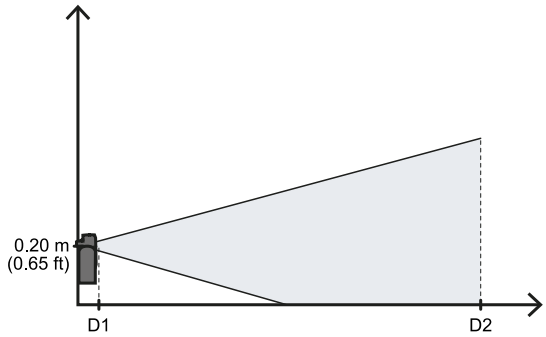

The upper portion of the field of view of the sensor never intersects the ground.

D1 = projection on the reference plane of the intersection point of the field of view at a height of 0.2 m (6.56 ft)

D2 = 5 m (16.4 ft)

6.1.6 Configuration parameters

6.1.6.1 Introduction

For each sensor, the programmable parameters are the following:

- number of detection fields
- detection field dependency

- for each detection field:
  - horizontal angular coverage
  - detection distance
  - safety working mode
  - static object detection function
  - restart timeout
  - T_{OFF}

6.1.6.2 Parameters table

General sensor parameters

Parameter	Min	Max	Default value	Unit of measure
Detection field dependency	Enabled, Disabled		Enabled	-
Anti-masking sensitivity	Disabled, Low, Medium, High		Low	-
Anti-masking distance	200	1000	1000	mm
Anti-rotation around axes	Disabled, Enabled		Disabled	-
Anti-rotation around axes - Tilt	Disabled, Enabled		Disabled	-
Anti-rotation around axes - Roll	Disabled, Enabled		Disabled	-
Muting group	None, Group 1, Group 2, both		Group 1	-

General detection field parameters

Parameter	Min	Max	Default value	Unit of measure
Detection distance of detection field 1	200	5000*	1000	mm
Detection distance of detection field 2	0	5000*	1000	mm
Detection distance of detection field 3	0	5000*	0	mm
Detection distance of detection field 4	0	5000*	0	mm
Horizontal angular coverage	10	100	90	degrees
Safety working mode	Access detection and restart prevention, Always-on access detection, Always-on restart prevention		Access detection and restart prevention	-
Static object detection	Enabled, Disabled		Disabled	-
Restart timeout	100	60000	4000	ms
T_{OFF}	100	60000	100	ms
Restart signal type	Automatic, Manual, Safe manual		Automatic	-

Note*: *the sum of all the detection distances (for each sensor) cannot exceed 5000 mm.*

6.1.6.3 Horizontal angular coverage

The horizontal angular coverage ranges from 10° to 100° for the entire field of view.

The horizontal angular coverage of the detection field must be wider than or equal to the horizontal angular coverage of the following detection fields.

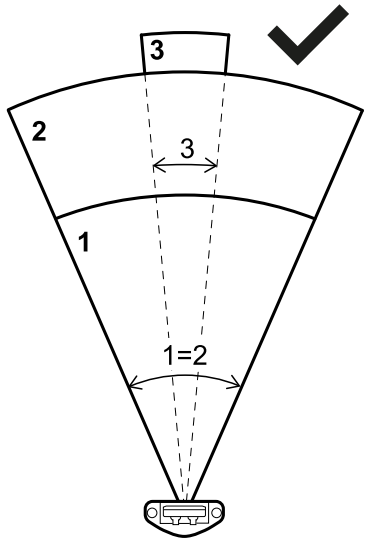

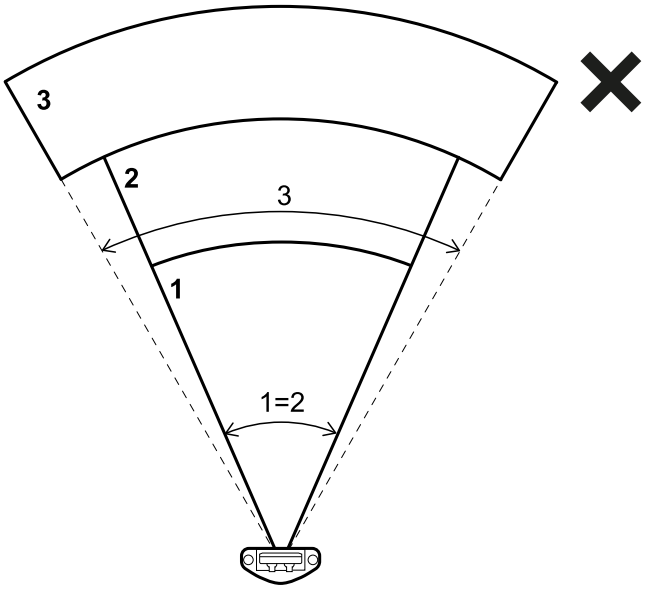

6.1.6.4 Detection distance

The detection distance of the first detection field starts from the sensor. The detection distance of one field starts where the one of the previous field ends.

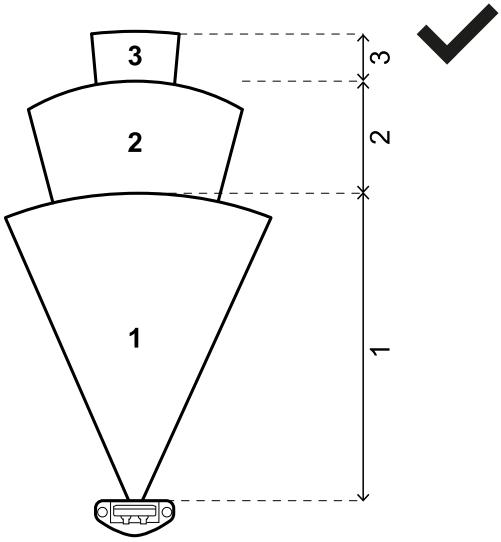

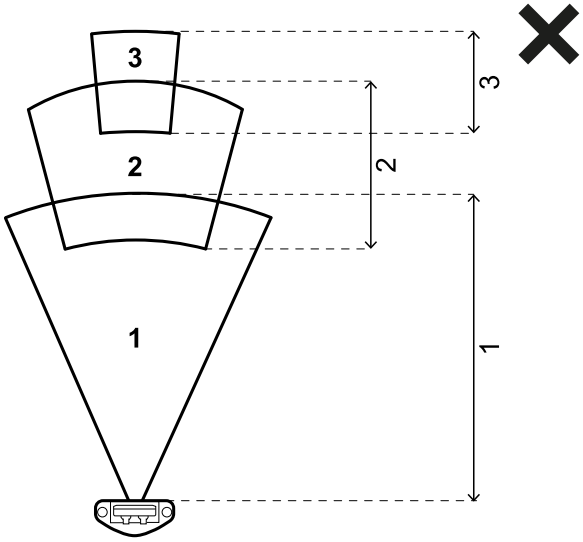

The detection distance of one or more fields can be 0 (e.g., detection field 3). The first detection field with a detection distance other than 0 (e.g., detection field 1) must have a minimum detection distance of 500 mm.

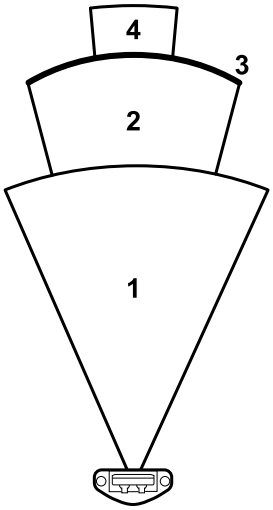

6.2 Pro line sensors: S201A-W, S203A-W, S203A-WT

Contents

This section includes the following topics:

6.2.1 Main features **159**
6.2.2 Sensor field of view **161**
6.2.3 Installation recommendations for the stationary application **165**
6.2.4 Installation recommendations for the mobile application **168**
6.2.5 Range of distances **169**
6.2.6 Configuration parameters **170**
6.2.7 Classic shape **171**
6.2.8 Corridor shape **172**

6.2.1 Main features

6.2.1.1 Feature list S201A-W sensors

Model-type	S201A-W
Compatible control unit production line	Core Line eXtended Line
Safety function managed	Access detection Restart prevention
Safety working modes	Access detection and restart prevention Always-on access detection Always-on restart prevention
Application	Stationary Mobile Vehicle
Outdoor installation	Yes

Configuration tool	Inxpect Safety Inxpect Safety Studio
Access detection speed limit (stationary application)	Min: 0.1 m/s (0.33 ft/s) Max: 1.6 m/s (5.25 ft/s)
Access detection speed limit* (mobile application)	For detection distance less than or equal to 4 m (13.12 ft): • Min: 0.1 m/s (0.33 ft/s) • Max: 3 m/s (9.84 ft/s) For detection distance greater than 4 m: • Min: 0.1 m/s (0.33 ft/s) • Max: 2 m/s (6.56 ft/s)
Dynamic configuration available	Up to 32**
Static object detection option	Yes

Note*: only the speed of the vehicle or of the part of machinery is considered. This is based on the assumption that the person recognizes the hazard and stands still.*

Note**: for limitations that reduce the maximum number of dynamic configurations, see "Dynamic configuration presets" on page 36.*

6.2.1.2 Feature list S203A-W and S203A-WT sensors

Model-type	S203A-W S203A-WT
Compatible control unit production line	Core Line eXtended Line
Safety function managed	Access detection Restart prevention
Safety working modes	Access detection and restart prevention Always-on access detection Always-on restart prevention
Application	Stationary Mobile Vehicle
Outdoor installation	Yes, also with Surface Moisture Robustness function, see "Surface moisture robustness" on page 49
Configuration tool	Inxpect Safety Inxpect Safety Studio
Access detection speed limit (stationary application)	Min: 0.1 m/s (0.33 ft/s) Max: 1.6 m/s (5.25 ft/s)
Access detection speed limit* (mobile application)	For detection distance less than or equal to 4 m (13.12 ft): • Min: 0.1 m/s (0.33 ft/s) • Max: 3 m/s (9.84 ft/s) For detection distance greater than 4 m: • Min: 0.1 m/s (0.33 ft/s) • Max: 2 m/s (6.56 ft/s)
Dynamic configuration available	Up to 32**
Static object detection option	Yes

Note*: only the speed of the vehicle or of the part of machinery is considered. This is based on the assumption that the person recognizes the hazard and stands still.*

Note**: for limitations that reduce the maximum number of dynamic configurations, see "Dynamic configuration presets" on page 36.*

6.2.2 Sensor field of view

6.2.2.1 Dimensions for S201A-W sensors

Below are the maximum field of view dimensions **[A]** and the relative gray area **[B]**.

The gray area dimensions are the same for maximum angular coverage (as described in the figures below) and smaller coverages.

***Note**: the gray area dimensions described are related to the detection of humans.*

Access detection function

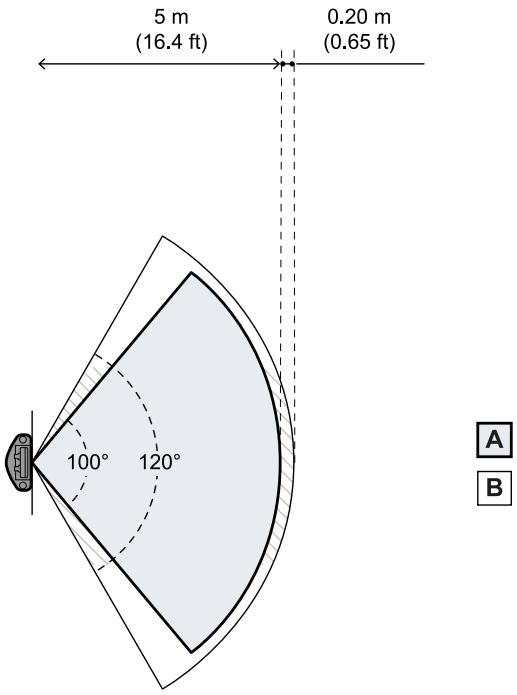

Top view

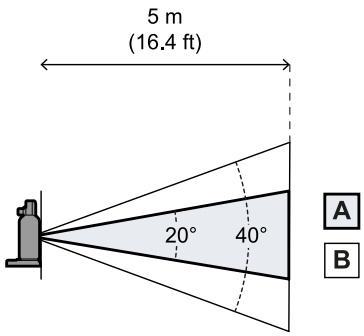

Side view

Restart prevention function

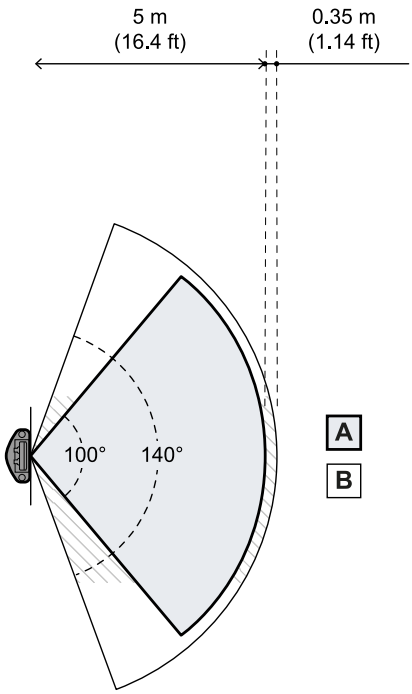

Top view

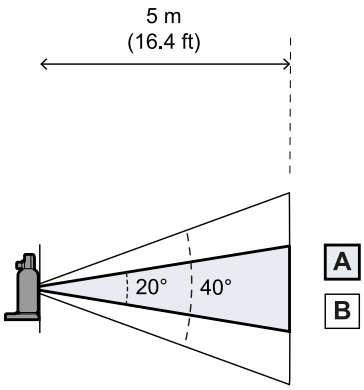

Side view

6.2.2.2 Position of the field of view for S201A-W sensors

The field of view is tilted 2.5°

To understand the actual position of the sensor field of view consider the LED position:

- left with sensor LED on the right (with respect to the sensor center, facing the sensor)
- right with sensor LED on the left (with respect to the sensor center, facing the sensor)
- downward with sensor LED up

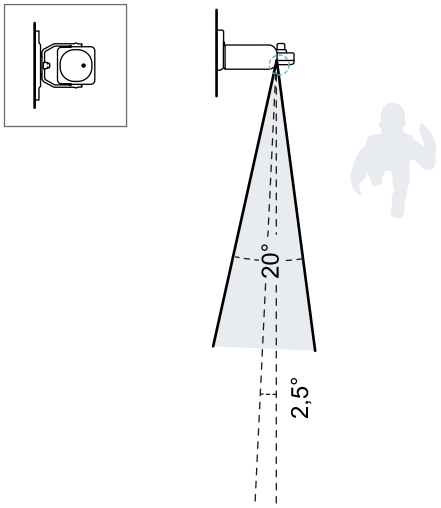

Top view with sensor inclination 0°.

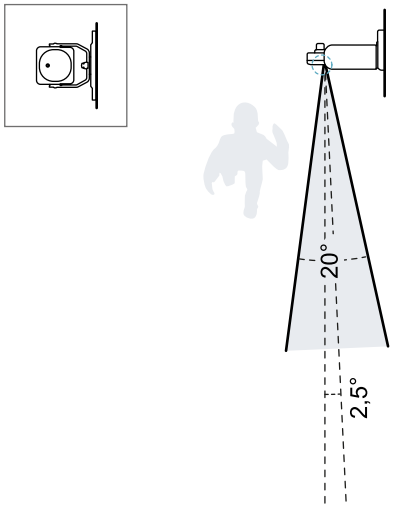

Top view with sensor inclination 0°.

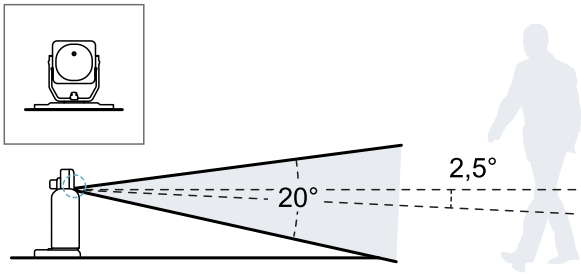

Side view with sensor inclination 0°.

6.2.2.3 Dimensions for S203A-W sensors

Below are the maximum field of view dimensions **[A]** and the relative gray area **[B]**.

The gray area dimensions are the same for maximum angular coverage (as described in the figures below) and smaller coverages.

***Note**: the gray area dimensions described are related to the detection of humans.*

Access detection function

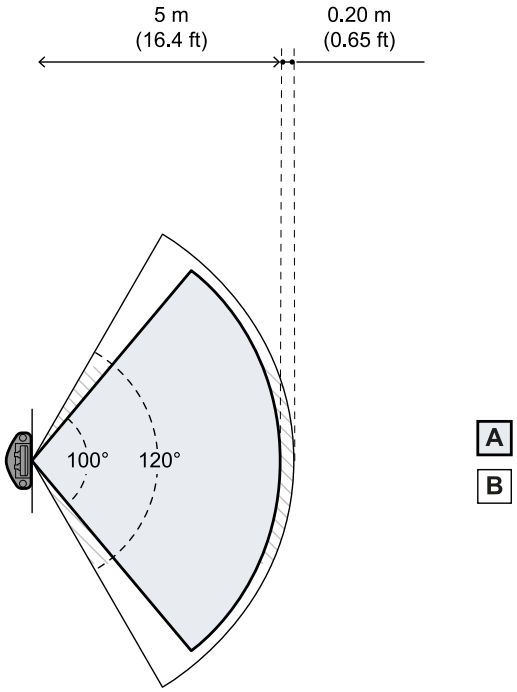

Top view

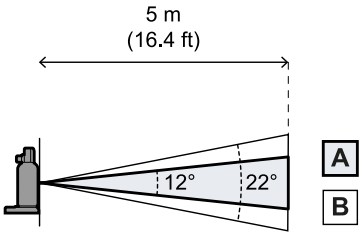

Side view

Restart prevention function

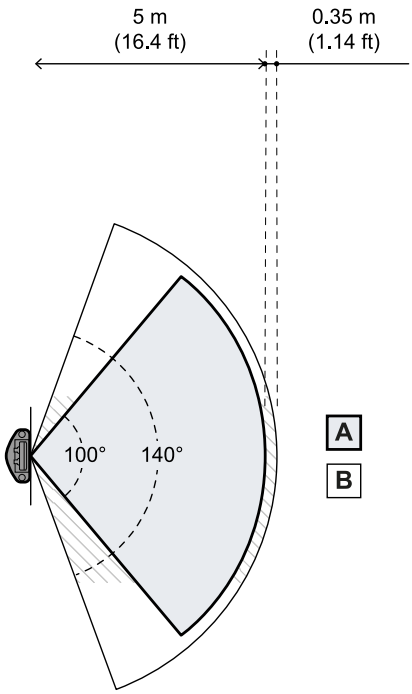

Top view

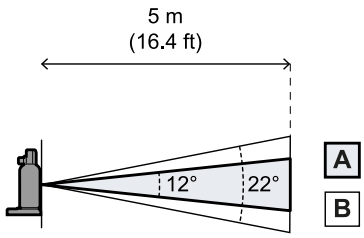

Side view

6.2.2.4 Position of the field of view for S203A-W sensors

The field of view is tilted 1°

To understand the actual position of the sensor field of view consider the LED position:

- left with sensor LED on the right (with respect to the sensor center, facing the sensor)
- right with sensor LED on the left (with respect to the sensor center, facing the sensor)
- downward with sensor LED up

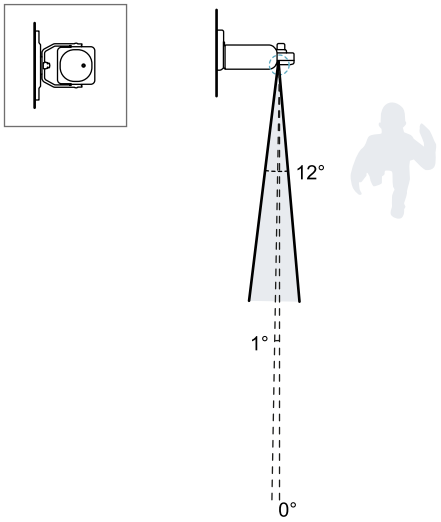

Top view with sensor inclination 0°.

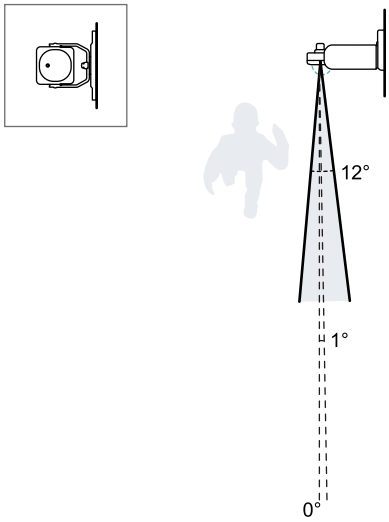

Top view with sensor inclination 0°.

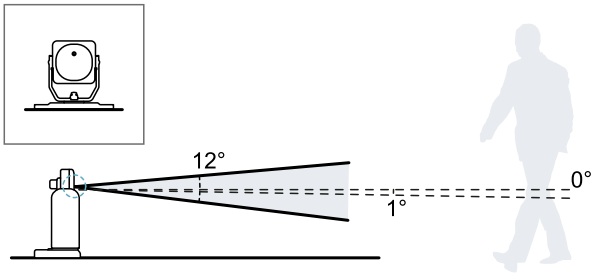

Side view with sensor inclination 0°.

6.2.3 Installation recommendations for the stationary application

6.2.3.1 For access detection function (general)

WARNING! Take all necessary precautions to prevent people from climbing over and entering the area, whenever there is that risk.

Below are some recommendations for the sensor positioning for the access detection function:

- If the distance between the ground and the bottom portion of the field of view is greater than 20 cm (7.9 in), take precautions to make sure that even a person entering the dangerous area below the volume monitored by the field of view is still detected.
- The installation height (from the ground to the center of the sensor) must be greater than or equal to 15 cm (5.9 in).
- If the height above the ground is less than 20 cm (7.9 in), install the sensor with an inclination of minimum 10° upwards.

For access detection function (S203A-W and S203A-WT, fw version 5.0)

For over-the-head installations, the line perpendicular to the sensor must intersect the reference plane. Below are some recommendations to be followed:

- the installation height **[h]** must be greater than 2 m (6.56 ft)
- the inclination **[α]** must be in the range of [-90°; -60°]

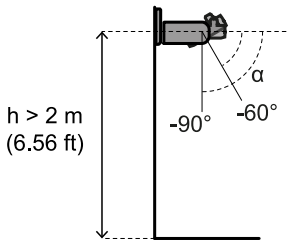

For access control of an entrance

If the sensor is used in access detection for monitoring a pedestrian entry in a confined area, the recommendations below should be taken into consideration:

- The installation height (from the ground to the center of the sensor) must be greater than or equal to 20 cm (7.9 in).
- The horizontal angular coverage must be 90°.
- The rotation around the x-axis must be 90°.
- The inclination must be 40° upwards.

Below is an example:

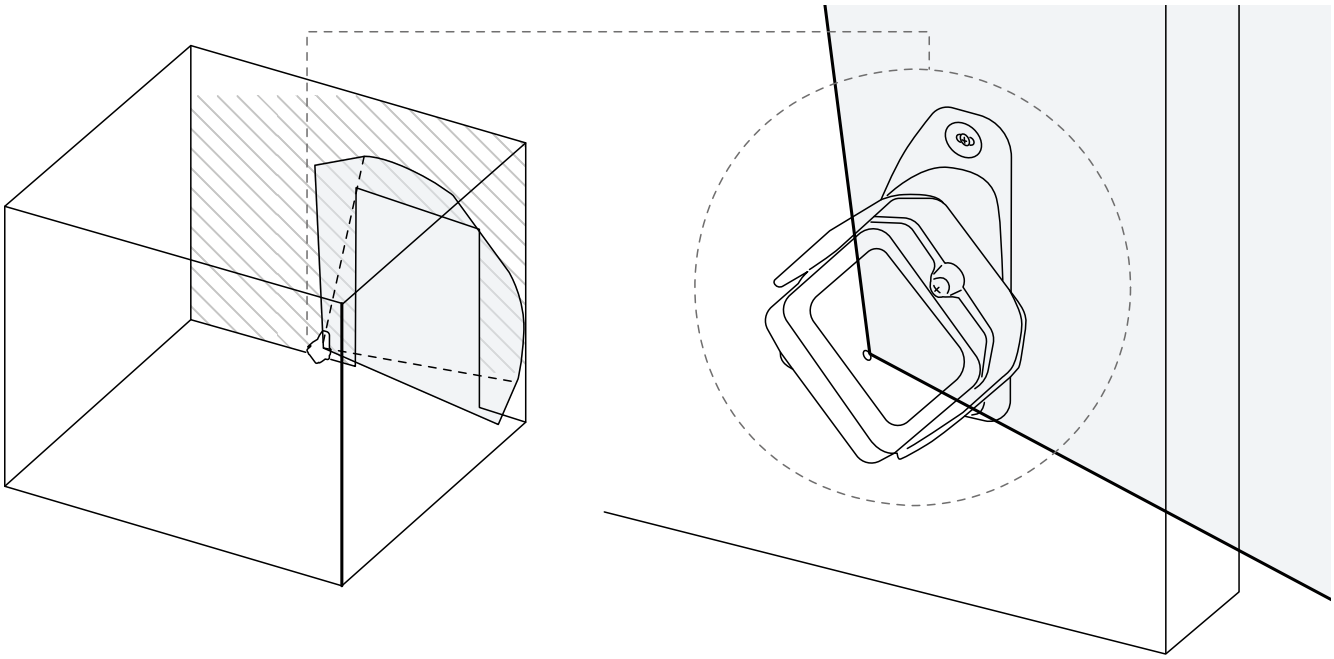

WARNING! The horizontal angular coverage in the first 800 mm (31.5 in) of the field of view must be at least 60°. If this specification cannot be respected, take precautions to avoid the access of a human in the first 800 mm (31.5 in) of the field of view.

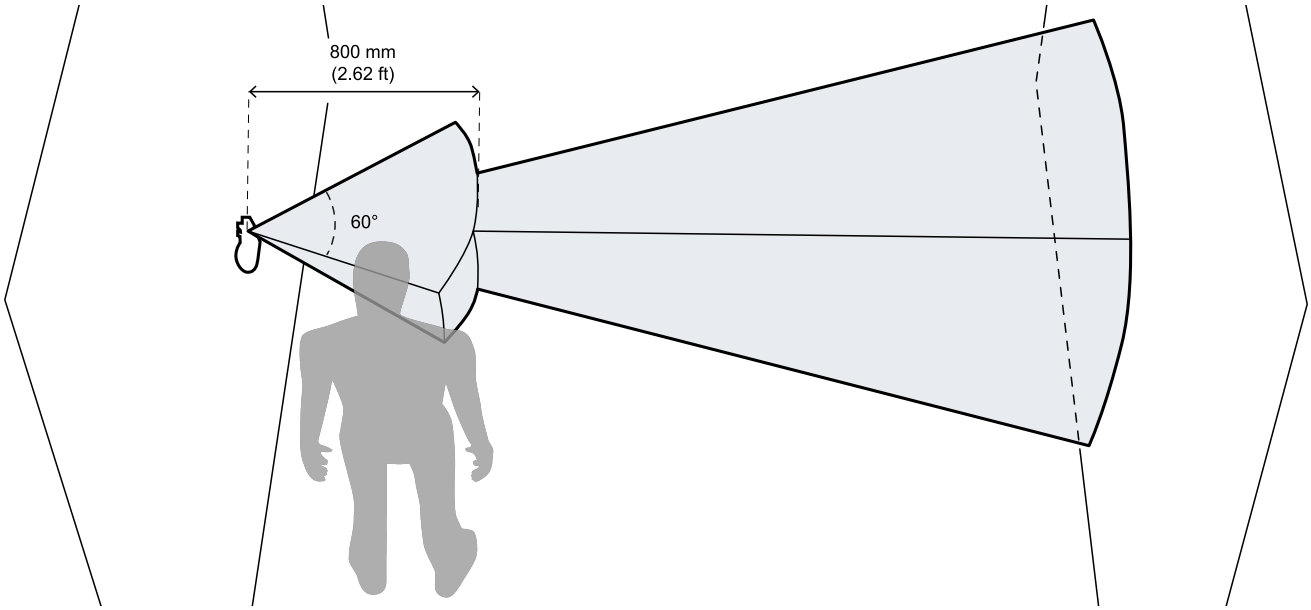

6.2.3.2 For restart prevention function

Below are some recommendations for the sensor positioning for the restart prevention function:

- The installation height (from the ground to the center of the sensor) must be greater than or equal to 15 cm (5.9 in).
- If the height above the ground is less than 20 cm (7.9 in), install the sensor with an inclination of minimum 10° upwards.

The restart prevention function is effective if the sensor can detect a person's movements or their static residual movements in radial directions. To detect people who are not standing or squatting, it is important that the sensor can clearly detect the person's chest.

Particular attention should be paid to the following situations:

- There are objects that limit or prevent the sensor from detecting motion.
- The sensor does not detect a sufficient portion of the body or does not properly detect the person's chest.

- The installation height (from the ground to the center of the sensor) must be greater than or equal to 15 cm (5.9 in).

A validation procedure (see "Validate the safety functions" on page 75) must be performed when one or more of the above conditions are met.

If the conditions described above limit the performance of the sensor, take the following steps to reach an appropriate level of performance:

- Increase the **Restart timeout** parameter.
- Change the position of the sensors.
- Add more sensors.

If one or more of the above actions are taken, it is recommended to perform a validation procedure (see "Validate the safety functions" on page 75).

Below are some examples of situations where the above conditions are met (✓) or not met (X). These examples are not meant to be exhaustive.

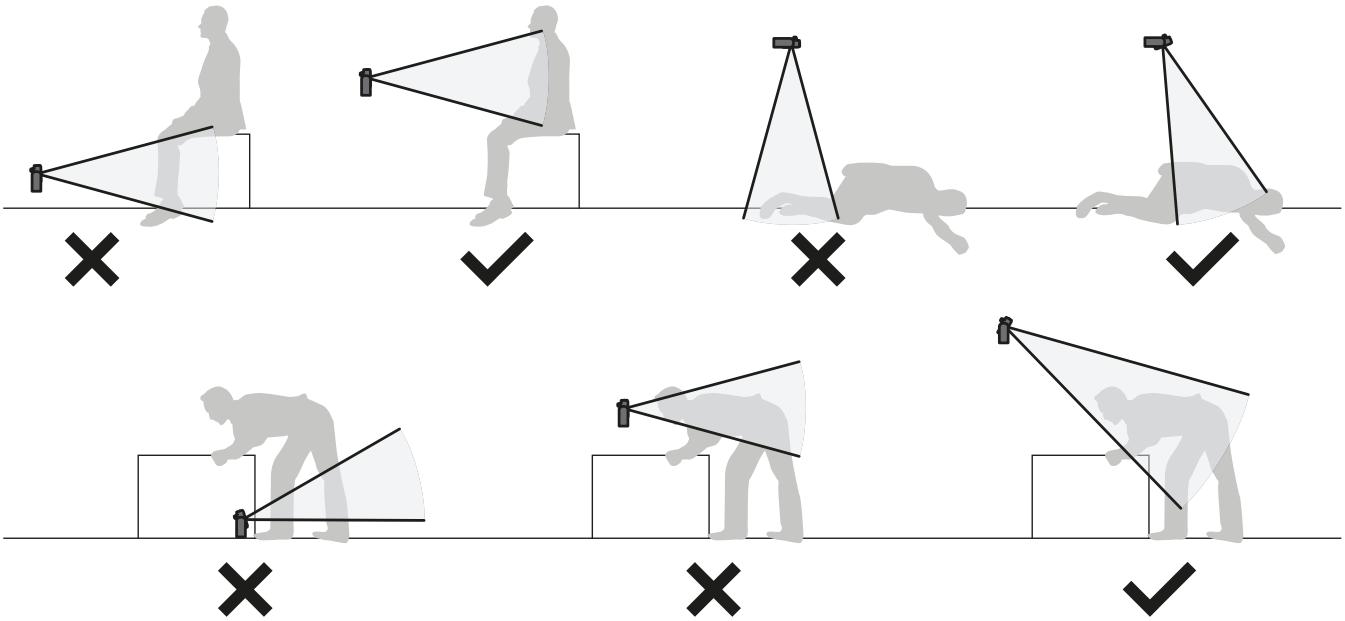

6.2.3.3 For outdoor application

The recommendations reported above for access detection and restart prevention functions remain valid in outdoor environments.

Before installing a sensor facing downwards, make sure there are neither liquids nor radar reflective materials on the floor.

Position exposed to precipitation

If the sensor installation position might be exposed to precipitation that can cause undesired alarms, it is recommended to take the following precautions:

- Make a cover to protect the sensor from rain, hail, or snow, so that water droplets do not fall directly on the sensor.
- Position the sensor so that it does not frame the ground where puddles might form.

NOTICE: *Weather conditions outside specifications can prematurely age the device.*

If the monitored area is free of static objects, the system can withstand rainfall up to 45 mm/h.

Recommendations for covering the sensor

Below are some recommendations for creating and installing a sensor cover:

- height from sensor: 15 cm (6 in)
- width: minimum 30 cm (11.8 in), maximum 40 cm (15.7 in)
- protrusion from the sensor: minimum 15 cm (6 in), maximum 20 cm (7.9 in)
- water outflow: at the sides or behind but not in front of the sensor (the cover should be arched and/or tilted backwards)

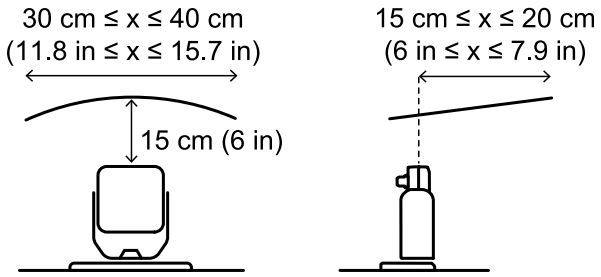

Position not exposed to precipitation

If the installation position of the sensor is not exposed to precipitation, no special precautions are required.

6.2.4 Installation recommendations for the mobile application

6.2.4.1 General recommendations

In mobile applications, the sensor moves with the vehicle or moving machinery parts.

Below are some recommendations for defining the sensor position:

- position the sensor so the floor is excluded from its detection field to avoid undesired alarms
- installation height (from the ground to the center of the sensor): minimum 15 cm (5.9 in)
- suggested inclination: minimum 15° for S201A model, 10° for S203A model

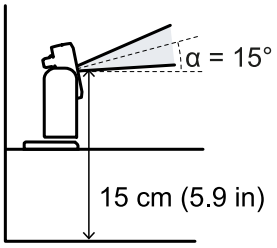

S201A model sensors

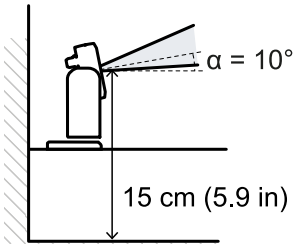

S203A model sensors

6.2.4.2 For outdoor application

The general recommendations reported above remain valid in outdoor environments.

Before installing a sensor facing downwards, make sure there are neither liquids nor radar reflective materials on the floor.

Position exposed to precipitation

If the sensor installation position might be exposed to precipitation that can cause undesired alarms, it is recommended to take the following precautions:

- Make a cover to protect the sensor from rain, hail, or snow, so that water droplets do not fall directly on the sensor.
- Position the sensor so that it does not frame the ground where puddles might form.

NOTICE: *Weather conditions outside specifications can prematurely age the device.*

If the monitored area is free of static objects, the system can withstand rainfall up to 45 mm/h.

Position not exposed to precipitation

If the installation position of the sensor is not exposed to precipitation, no special precautions are required.

6.2.5 Range of distances

6.2.5.1 Introduction

The detection distances at which the human body is guaranteed to be detected depend on the inclination of the sensor. Below are the three possible configurations and the relative detection distance ranges (**D1** = start detection distance, **D2** = end of detection distance).

***Note**: these distance ranges are only valid for fields of view with classic shapes.*

6.2.5.2 Installation configurations

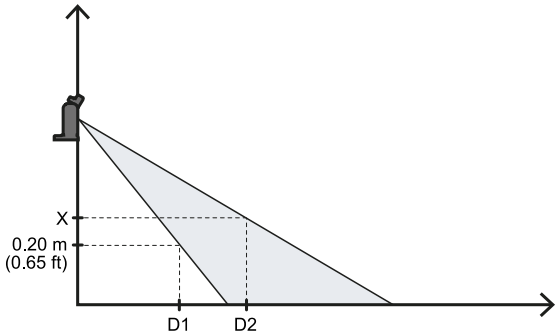

Both the upper portion and the bottom portion of the field of view always intersect the ground.

D1 = projection on the reference plane of the intersection point of the field of view at a height of 0.2 m (6.56 ft)

D2 = projection on the reference plane of the intersection point of the field of view at height X (where "X" is 0.6 m (19.68 ft))

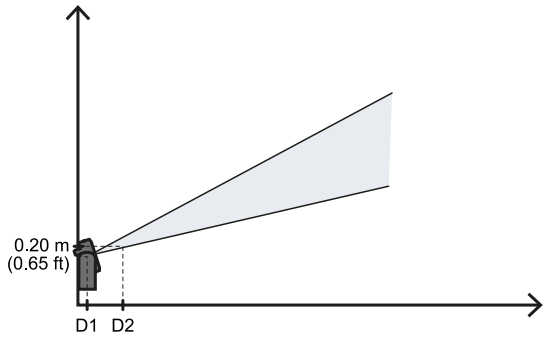

The field of view of the sensor never intersects the ground

D1 = 0

D2 = projection on the reference plane of the intersection point of the field of view at a height of 0.2 m (6.56 ft)

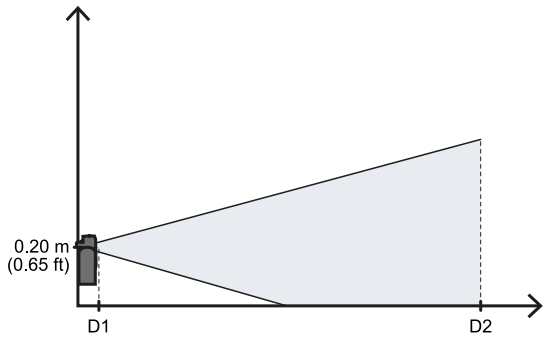

The upper portion of the field of view of the sensor never intersects the ground.

D1 = projection on the reference plane of the intersection point of the field of view at a height of 0.2 m (6.56 ft)

D2 = 5 m (16.4 ft)

6.2.6 Configuration parameters

6.2.6.1 Introduction

For each sensor, the programmable parameters are the following:

- number of detection fields
- detection field dependency*
- detection area shape
- for each detection field:
  - horizontal angular coverage
  - detection distance
  - safety working mode
  - static object detection function
  - restart timeout
  - T_{OFF}
  - classic shape parameters
  - corridor shape parameters

  Note*: it can be set for each sensor only with Inxpect Safety Studio.*

6.2.6.2 Parameters table

General sensor parameters

Parameter	Min	Max	Default value	Unit of measure
Detection field dependency	Enabled, Disabled		Enabled	-
Detection area shape	Classic, Corridor		Classic	-
Anti-masking sensitivity	Disabled, Low, Medium, High		Low	-
Anti-masking distance	200	1000	1000	mm
Anti-rotation around axes	Disabled, Enabled		Disabled	-
Anti-rotation around axes - Tilt	Disabled, Enabled		Disabled	-
Anti-rotation around axes - Roll	Disabled, Enabled		Disabled	-
Muting group	None, Group 1, Group 2, both		Group 1	-

General detection field parameters

Parameter	Min	Max	Default value	Unit of measure
Detection distance of detection field 1	200	5000*	1000	mm
Detection distance of detection field 2	0	5000*	1000	mm
Detection distance of detection field 3	0	5000*	0	mm
Detection distance of detection field 4	0	5000*	0	mm
Safety working mode	Access detection and restart prevention, Always-on access detection, Always-on restart prevention		Access detection and restart prevention	-
Static object detection	Enabled, Disabled		Disabled	-
Restart timeout	100	60000	4000	ms
T_{OFF}	100	60000	100	ms
Restart signal type	Automatic, Manual, Safe manual		Automatic	-

Note*: the sum of all the detection distances (for each sensor) cannot exceed 5000 mm.*

Classic shape parameters

Parameter	Min	Max	Default value	Unit of measure
Horizontal angular coverage - left	0*	50	45	degrees
Horizontal angular coverage - right	0*	50	45	degrees

Note*: the minimum horizontal angular coverage (left + right) is 10°.*

Corridor shape parameters

Parameter	Min	Max	Default value	Unit of measure
Left side	0*	4000	500	mm
Right side	0*	4000	500	mm

Note*: the minimum width (left + right) is 200 mm.*

6.2.6.3 Detection distance

The detection distance of the first detection field starts from the sensor. The detection distance of one field starts where the one of the previous field ends.

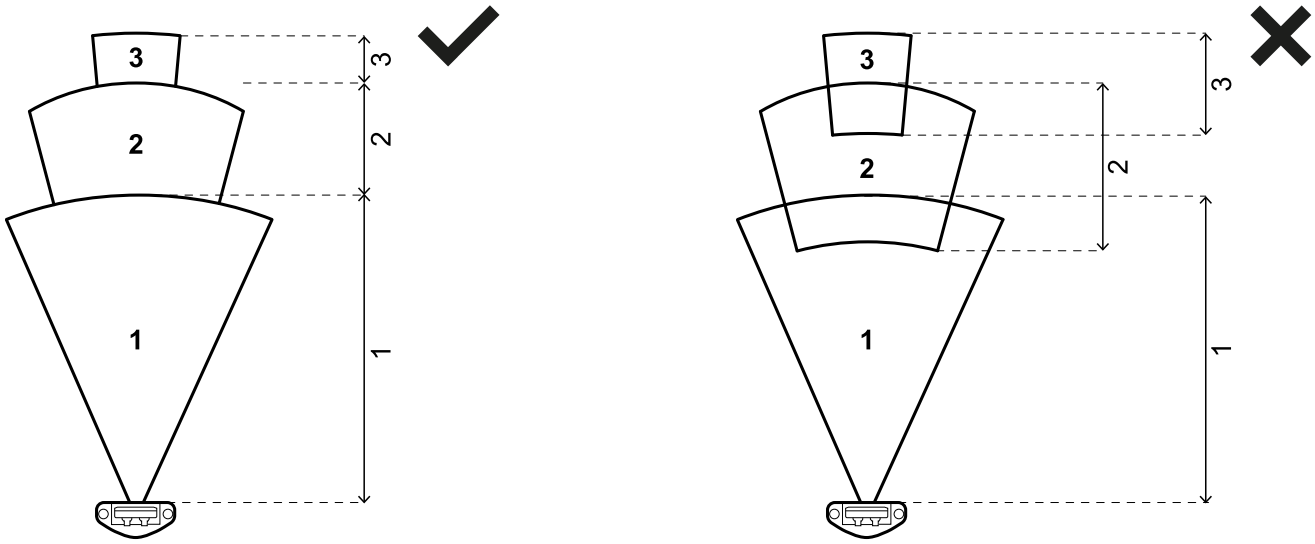

The detection distance of one or more fields can be 0 (e.g., detection field 3). The first detection field with a detection distance other than 0 (e.g., detection field 1) must have a minimum detection distance of 200 mm.

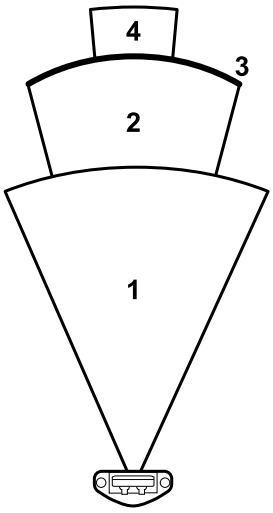

6.2.7 Classic shape

6.2.7.1 Horizontal angular coverage

The classic shape allows you to set the horizontal angular coverage and, if desired, to make it asymmetric.

The horizontal angular coverage ranges from 10° to 100° for the entire field of view.

Each detection field can have its own symmetric/asymmetric horizontal angular coverage.

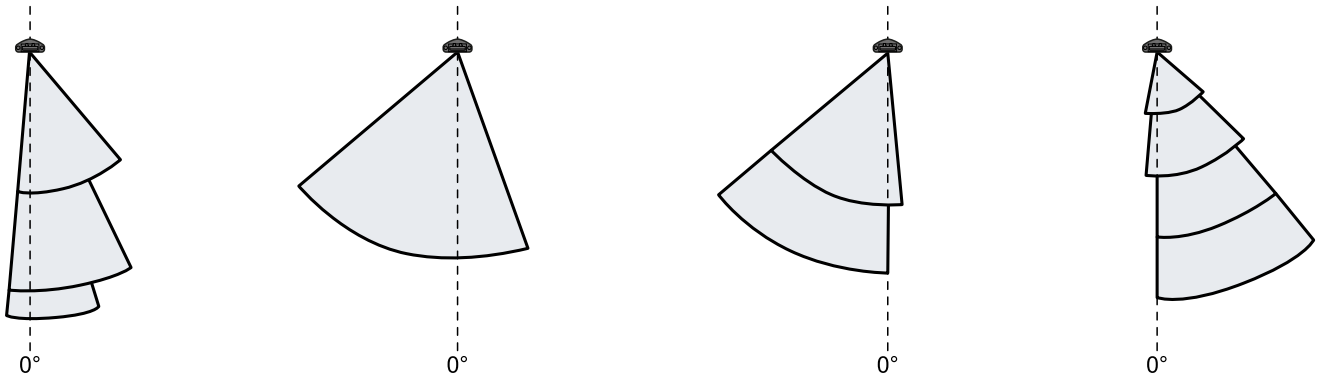

Examples of asymmetric horizontal angular coverage.

Conditions:

- The sensor axis must always be included in all the detection fields.
- The horizontal angular coverage of each detection field must be wider than, or equal to, the horizontal angular coverage of the following detection fields.
- The minimum field of view width is 10°.

6.2.8 Corridor shape

6.2.8.1 Width

The corridor shape allows to customize the shape of the field of view. Starting from the standard shape with maximum angular coverage, it is possible to crop it on the side with two flat surfaces. Each detection field can have its own corridor width.

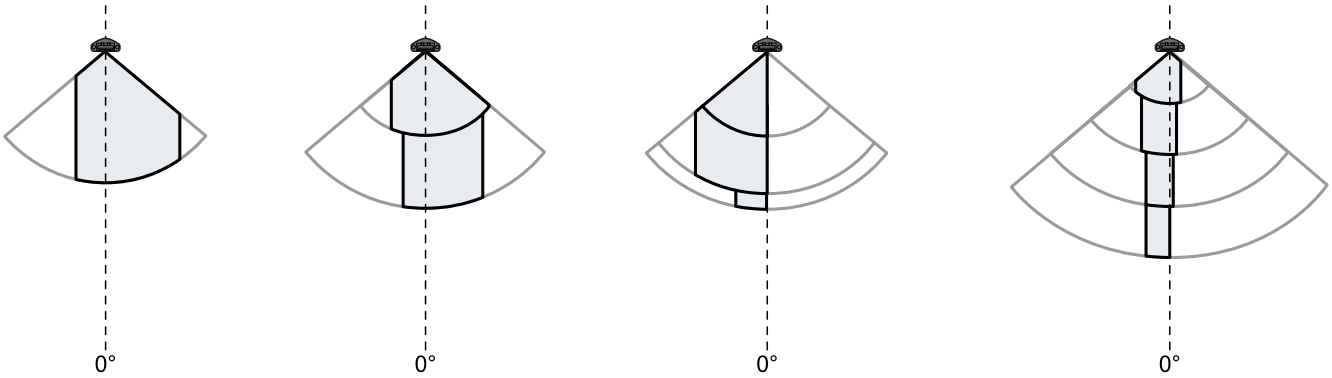

Examples of corridor width.

Conditions:

- The sensor axis must always be included in all the detection fields.
- The corridor width of each detection field must be wider than, or equal to, the corridor width of the following detection fields.
- The minimum corridor width is 20 cm.

6.3 Omni line sensors: S202A-MC2 and S202A-MC4

Contents

This section includes the following topics:

6.3.1 Main features **173**
6.3.2 Sensor field of view **174**
6.3.3 Installation recommendations for the stationary application **175**
6.3.4 Installation recommendations for the mobile application **176**
6.3.5 Configuration parameters **176**
6.3.6 Classic shape **178**
6.3.7 Corridor shape **180**
6.3.8 Range of distances **182**
6.3.9 Cuboid shape **184**

6.3.1 Main features

6.3.1.1 Feature list

Model-type	S202A-MC2 S202A-MC4
Compatible control unit production line	eXtended Line
Safety function managed	Access detection Restart prevention
Safety working modes	Access detection and restart prevention Always-on access detection Always-on restart prevention
Application	Stationary Mobile Vehicle
Outdoor installation	Yes, only stationary
Configuration tool	Inxpect Safety Studio
Access detection speed limit (stationary application)	Min: 0.1 m/s (0.33 ft/s) Max: 1.6 m/s (5.25 ft/s)
Access detection speed limit* (mobile application)	Min: 0.1 m/s (0.33 ft/s) Max: 1.6 m/s (5.25 ft/s)
Dynamic configuration available	Up to 16***
Static object detection option	Yes

Note*: only the speed of the vehicle or of the part of machinery is considered. This is based on the assumption that the person recognizes the hazard and stands still.*

Note**: for limitations that reduce the maximum number of dynamic configurations, see "Dynamic configuration presets" on page 36.*

6.3.2 Sensor field of view

6.3.2.1 Dimensions

Access detection function

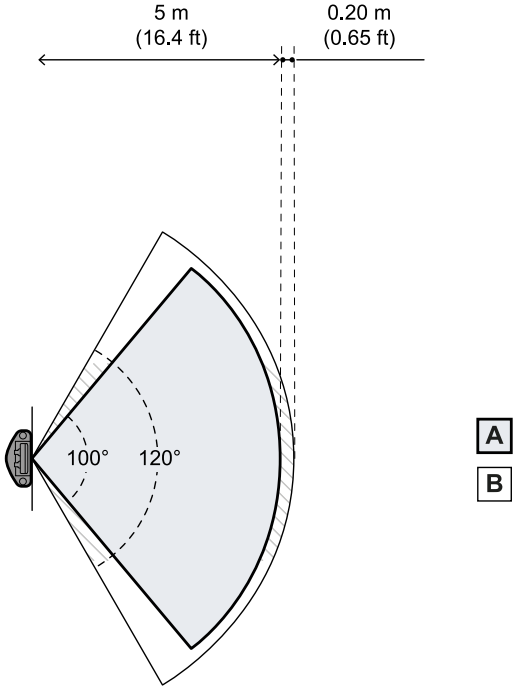

Top view

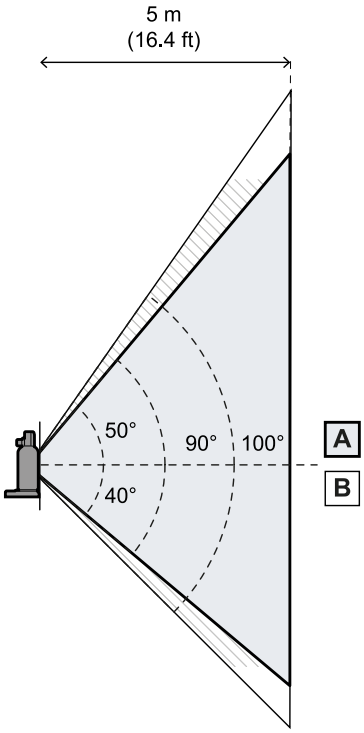

Side view

Restart prevention function

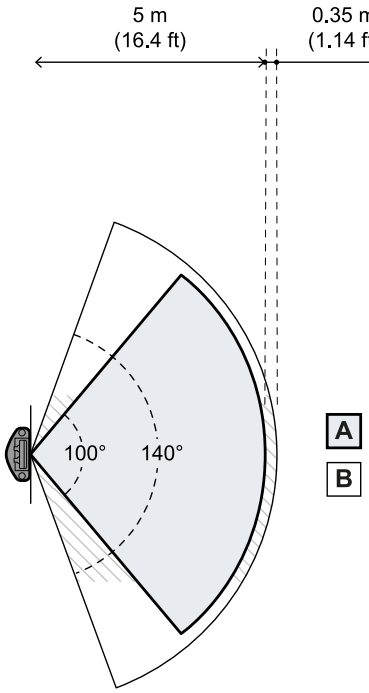

Top view

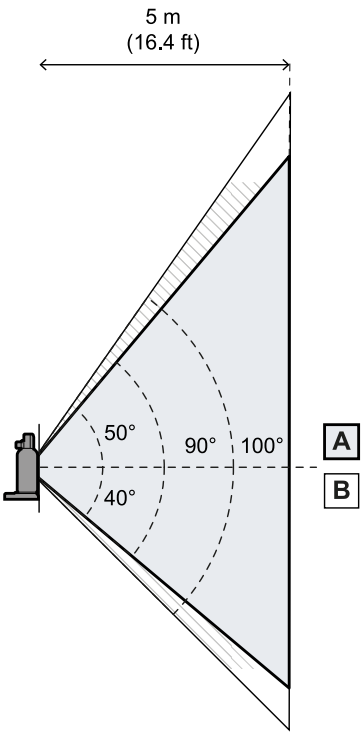

Side view

6.3.3 Installation recommendations for the stationary application

6.3.3.1 General recommendations

Below are some recommendations for the sensor positioning:

- The installation height (from the ground to the center of the sensor) must be greater than or equal to 20 cm (7.9 in).
- The sensor should be installed following one of these positions:
  - installation height **[h]** (from the reference plane to the center of the sensor) between 0.2 and 1.5 m (0.7 and 4.9 ft), with an inclination (tilt) in the range of [-25, +25]°.

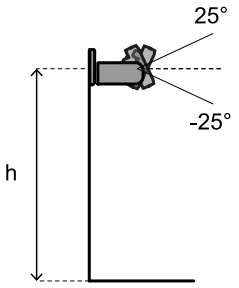

  - installation height **[h]**(from the reference plane to the center of the sensor) between 2 and 3.2 m (6.6 and 10.5 ft), with an inclination (tilt) of -60°.

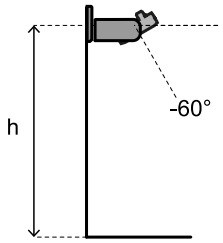

6.3.3.2 For access detection function

WARNING! Take all necessary precautions to prevent people from climbing over and entering the area, whenever there is that risk.

Below are some recommendations for the sensor positioning for the access detection function:

- If the distance between the ground and the bottom portion of the field of view is greater than 20 cm (7.9 in), take precautions to make sure that even a person entering the dangerous area below the volume monitored by the field of view is still detected.

6.3.3.3 For restart prevention function

The restart prevention function is effective if the sensor can detect a person's movements or their static residual movements. To detect people who are not standing or squatting, the sensor must clearly detect the person's chest or at least a portion of 1 meter (3.28 ft) of the body.

Particular attention should be paid to the following situations:

- There are objects that limit or prevent the sensor from detecting motion.
- The sensor does not detect a sufficient portion of the body or does not properly detect the person's chest.

A validation procedure (see "Validate the safety functions" on page 75) must be performed when one or more of the above conditions are met.

If the conditions described above limit the performance of the sensor, take the following steps to reach an appropriate level of performance:

- Increase the **Restart timeout** parameter.
- Change the position of the sensors.
- Add more sensors.

If one or more of the above actions are taken, it is recommended to perform a validation procedure (see "Validate the safety functions" on page 75).

6.3.3.4 For outdoor application

The recommendations reported above for access detection and restart prevention functions remain valid in outdoor environments.

Before installing a sensor facing downwards, make sure there are neither liquids nor radar reflective materials on the floor.

Position exposed to precipitation

If the sensor installation position might be exposed to precipitation that can cause undesired alarms, it is recommended to take the following precautions:

- Make a cover to protect the sensor from rain, hail, or snow, so that water droplets do not fall directly on the sensor.
- Position the sensor so that it does not frame the ground where puddles might form.

NOTICE: *Weather conditions outside specifications can prematurely age the device.*

If the monitored area is free of static objects, the system can withstand the following rainfall rates:

- if the sensor has an installation height (from the reference plane to the center of the sensor) between 0.2 and 1.5 m (0.66 and 4.9 ft), with an inclination (tilt) in the range of [-25, +25]°:
  - up to 100 mm/h in Access Detection
  - up to 15 mm/h in Restart Prevention
- otherwise:
  - up to 10 mm/h, in Access Detection

Position not exposed to precipitation

If the installation position of the sensor is not exposed to precipitation, no special precautions are required.

6.3.4 Installation recommendations for the mobile application

6.3.4.1 General recommendations

In mobile applications, the sensor moves with the vehicle or moving machinery parts.

Below are some recommendations for defining the sensor position:

- position the sensor so the floor is excluded from its detection field to avoid undesired alarms
- installation height (from the ground to the center of the sensor): minimum 15 cm (5.9 in)
- suggested inclination: 0°
- field of view shape: cuboid (Zmin: 15 cm; Zmax: 115 cm)

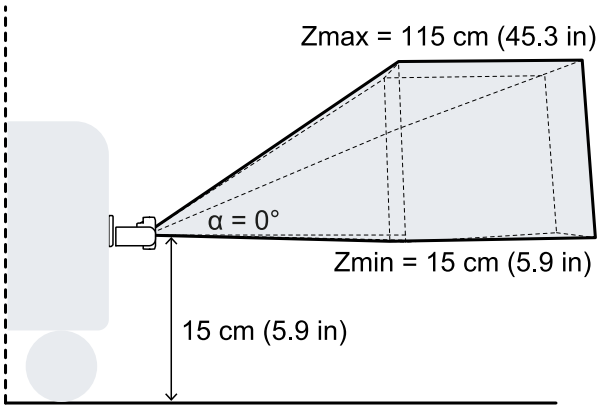

6.3.5 Configuration parameters

6.3.5.1 Introduction

For each sensor, the programmable parameters are the following:

- detection field dependency*
- detection area shape

- for each detection field:
  - horizontal angular coverage
  - detection distance
  - safety working mode
  - static object detection function
  - restart timeout
  - T_{OFF}
  - classic shape parameters
  - corridor shape parameters
  - cuboid shape parameters

  Note*: for each sensor, only for classic and corridor shapes; not configurable for cuboid shape.*

6.3.5.2 Detection fields

The maximum number of detection fields is fixed for each model-type:

- S202A-MC2: 2 detection fields
- S202A-MC4: 4 detection fields

6.3.5.3 Parameters table

General sensor parameters

Parameter	Min	Max	Default value	Unit of measure
Detection field dependency	Enabled, Disabled		Enabled*	-
Detection area shape	Classic, Corridor, Cuboid		Classic	-
Pan	-180	180	0	degrees
Tilt	-180	180	0	degrees
Anti-masking sensitivity	Disabled, Low, Medium, High		Low	-
Anti-masking distance	200	500	500	mm
Anti-rotation around axes	Disabled, Enabled		Disabled	-
Anti-rotation around axes - Tilt	Disabled, Enabled		Disabled	-
Anti-rotation around axes - Roll	Disabled, Enabled		Disabled	-
Muting group	None, Group 1, Group 2, both		Group 1	-

Note*: with a cuboid shape for the detection fields, the detection field dependency is disabled and cannot be enabled.*

General detection field parameters

Parameter	Min	Max	Default value	Unit of measure
Safety working mode	Access detection and restart prevention, Always-on access detection, Always-on restart prevention		Access detection and restart prevention	-
Static object detection	Enabled, Disabled		Disabled	-
Restart timeout	100	60000	4000	ms
T_{OFF}	100	60000	100	ms
Restart signal type	Automatic, Manual, Safe manual		Automatic	-

Classic shape parameters

Parameter	Min	Max	Default value	Unit of measure
Horizontal angular coverage - left	0*	50	40	degrees
Horizontal angular coverage - right	0*	50	40	degrees
Vertical angular coverage – top	0**	50	30	degrees
Vertical angular coverage - bottom	0**	50	30	degrees
Detection distance of detection field 1	200	5000***	1000	mm

Parameter	Min	Max	Default value	Unit of measure
Detection distance of detection field 2	0	5000***	1000	mm
Detection distance of detection field 3	0	5000***	0	mm
Detection distance of detection field 4	0	5000***	0	mm

Note*: *the minimum horizontal angular coverage (left + right) is 20°.*

Note**: *the minimum vertical angular coverage (top + bottom) is 30°.*

Note***: *the sum of all the detection distances (for each sensor) cannot exceed 5000 mm.*

Corridor shape parameters

Parameter	Min	Max	Default value	Unit of measure
Left side	0*	4000	500	mm
Right side	0*	4000	500	mm
Top side	0**	4000	500	mm
Bottom side	0**	4000	500	mm
Detection distance of detection field 1	200	5000***	1000	mm
Detection distance of detection field 2	0	5000***	1000	mm
Detection distance of detection field 3	0	5000***	0	mm
Detection distance of detection field 4	0	5000***	0	mm

Note*: *the minimum width (left + right) is 500 mm.*

Note**: *the minimum height (top + bottom) is 500 mm.*

Note***: *the sum of all the detection distances (for each sensor) cannot exceed 5000 mm.*

Cuboid shape parameters

Parameter	Min	Max	Default value	Unit of measure
X MIN	-5000*	5000	2000	mm
X MAX	-5000*	5000	3000	mm
Y MIN	-5000**	5000	Depends on the detection field	mm
Y MAX	-5000**	5000	Depends on the detection field	mm
Z MIN	0 ***	5000	0	mm
Z MAX	0 ***	5000	1000	mm
Cuboid line of sight	Enabled/Disabled		Enabled	mm
Show/hide full FOV	Show/hide full FOV		Show	mm
Cuboid rotation (pan) with respect to the sensor****	-180	+180	0	degrees

Note*: *the minimum depth (difference between X MIN and X MAX values) is 500 mm.*

Note**: *the minimum width (difference between Y MIN and Y MAX) is 500 mm.*

Note***: *the minimum height (difference between Z MIN and Z MAX) is 1000 mm.*

Note*****: *setting valid for the entire field of view of the sensor.*

6.3.6 Classic shape

6.3.6.1 Horizontal angular coverage

The classic shape allows you to set the horizontal angular coverage and, if desired, to make it asymmetric. The horizontal angular coverage ranges from 20° to 100° for the entire field of view.

Each detection field can have its own symmetric/asymmetric horizontal angular coverage.

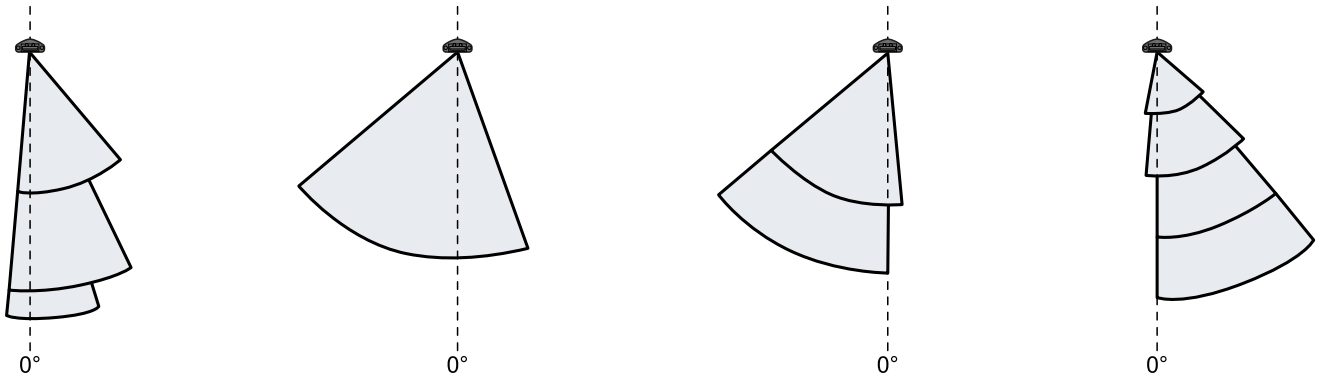

Examples of asymmetric horizontal angular coverage.

Conditions:

- The sensor axis must always be included in all the detection fields.
- The horizontal angular coverage of each detection field must be wider than, or equal to, the horizontal angular coverage of the following detection fields.
- The minimum field of view width is 20°.

6.3.6.2 Vertical angular coverage

It is also possible to customize the vertical angular coverage and, if desired, to make it asymmetric. The vertical angular coverage ranges from 30° to 90° for the entire field of view.

Each detection field can have its own symmetric/asymmetric vertical angular coverage.

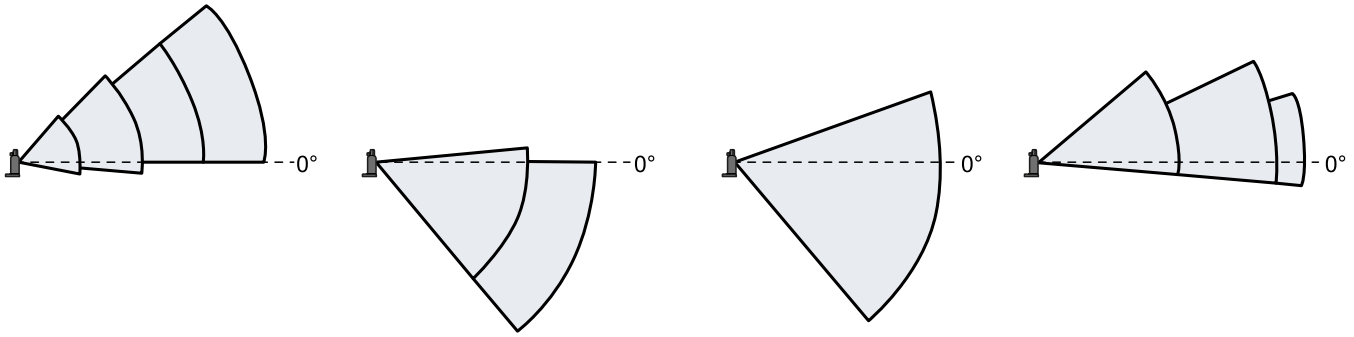

Examples of asymmetric vertical angular coverage.

Conditions:

- The sensor axis must always be included in all the detection fields.
- The vertical angular coverage of each detection field must be wider than, or equal to, the vertical angular coverage of the following detection fields.
- The minimum field of view height is 30°.

6.3.6.3 Detection distance

The detection distance of the first detection field starts from the sensor. The detection distance of one field starts where the one of the previous field ends.

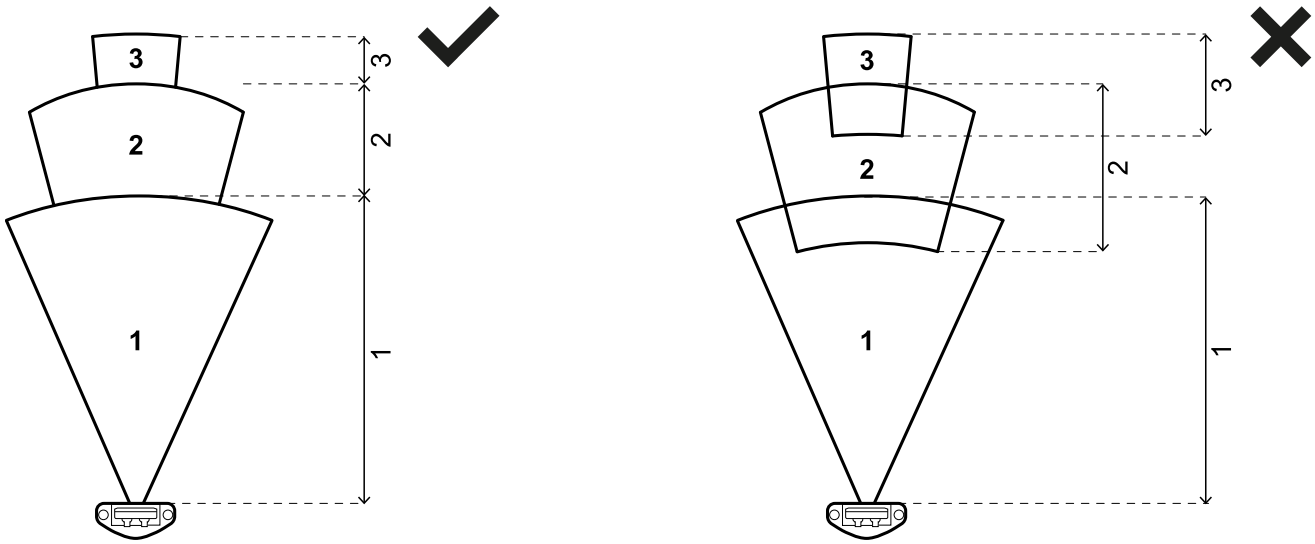

The detection distance of one or more fields can be 0 (e.g., detection field 3). The first detection field with a detection distance other than 0 (e.g., detection field 1) must have a minimum detection distance of 200 mm.

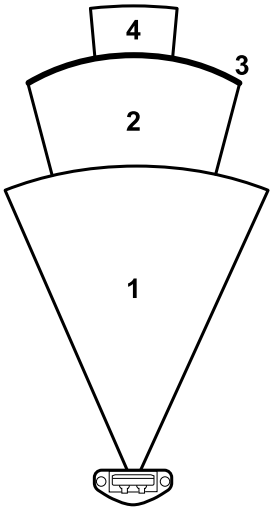

6.3.7 Corridor shape

6.3.7.1 Width

The corridor shape allows to customize the shape of the field of view. Starting from the standard shape with maximum angular coverage, it is possible to crop it on the side with two flat surfaces. Each detection field can have its own corridor width.

The field of view is cut by a vertical surface at the end.

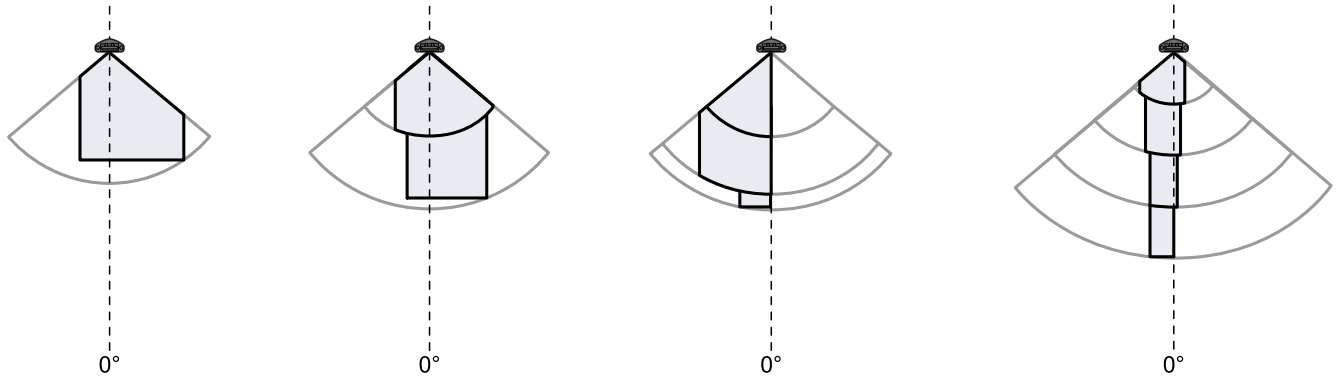

Examples of corridor width.

Conditions:

- The sensor axis must always be included in all the detection fields.
- The corridor width of each detection field must be wider than, or equal to, the corridor width of the following detection fields.
- The minimum corridor width is 50 cm.

6.3.7.2 Height

It is also possible to customize the height of the field of view. Starting from the standard shape with maximum vertical angular coverage, it is possible to crop it on the top/bottom with two flat surfaces. Each detection field can have its own corridor height.

The field of view is cut by a vertical surface at the end.

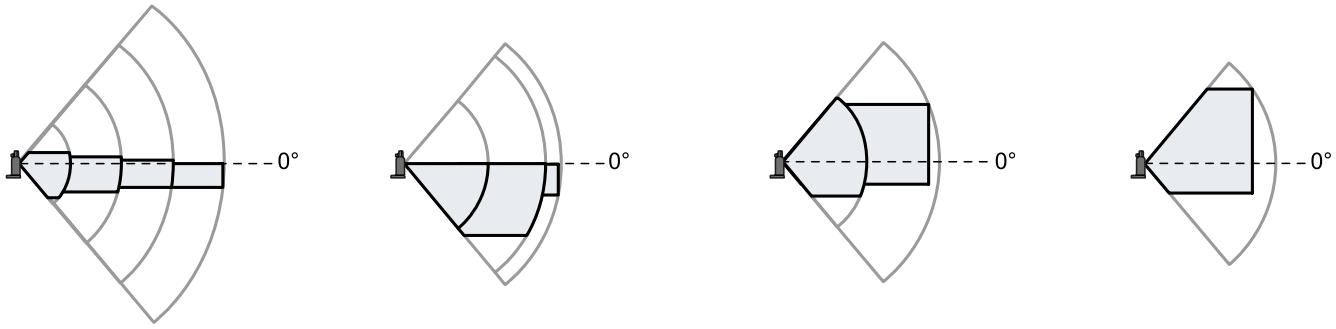

Examples of corridor height.

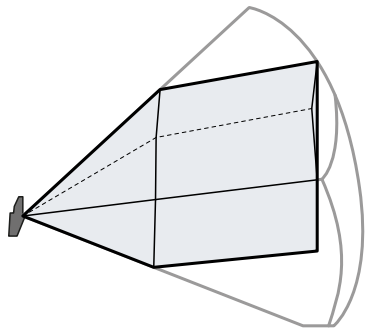

Example of corridor width and height.

Conditions:

- The sensor axis must always be included in all the detection fields.
- The corridor height of each detection field must be wider than, or equal to, the corridor height of the following detection fields.
- The minimum corridor height is 50 cm.

6.3.7.3 Detection distance

The detection distance of the first detection field starts from the sensor. The detection distance of one field starts where the one of the previous field ends.

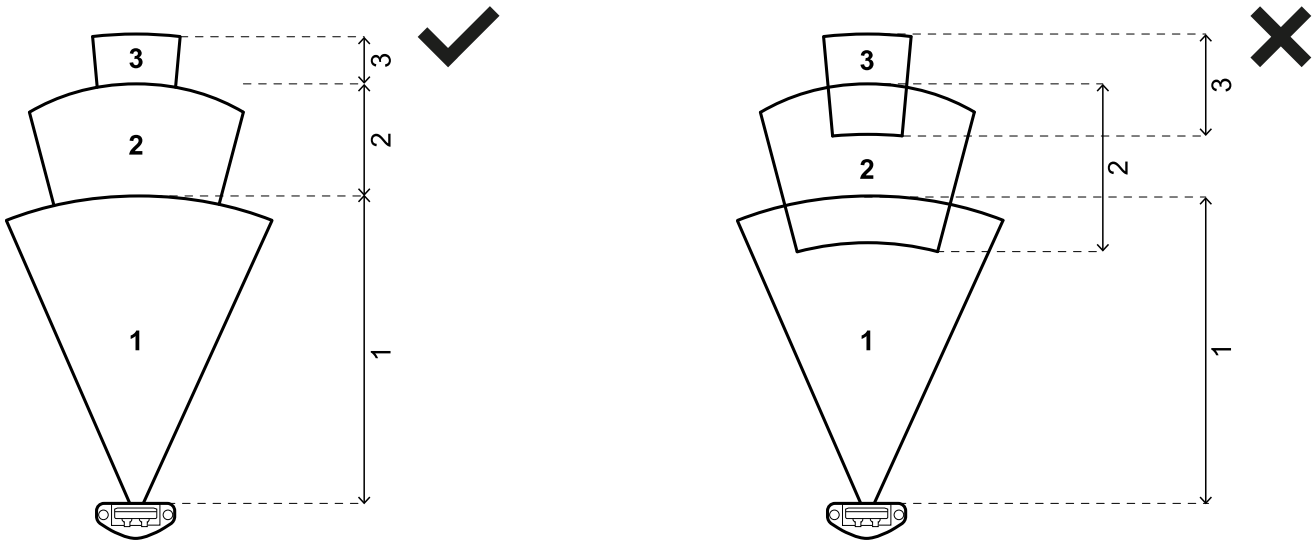

The detection distance of one or more fields can be 0 (e.g., detection field 3). The first detection field with a detection distance other than 0 (e.g., detection field 1) must have a minimum detection distance of 200 mm.

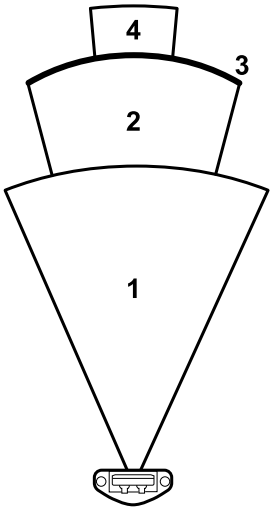

6.3.8 Range of distances

6.3.8.1 Introduction

The detection distances at which the human body is guaranteed to be detected depend on the inclination of the sensor. Below are the three possible configurations and the relative detection distance ranges (**D1** = start detection distance, **D2** = end of detection distance).

***Note**: these distance ranges are only valid for fields of view with classic shapes.*

6.3.8.2 Installation configurations

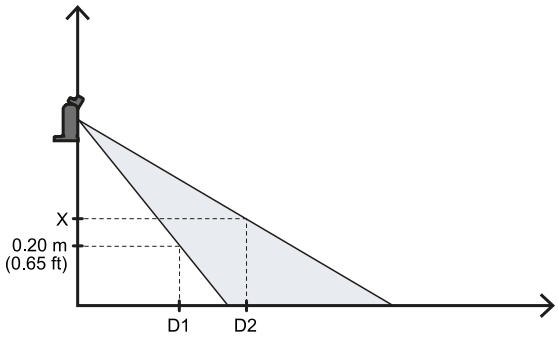

Both the upper portion and the bottom portion of the field of view always intersect the ground.

D1 = projection on the reference plane of the intersection point of the field of view at a height of 0.2 m (6.56 ft)

D2 = projection on the reference plane of the intersection point of the field of view at height X (where "X" is 1 m (3.28 ft))

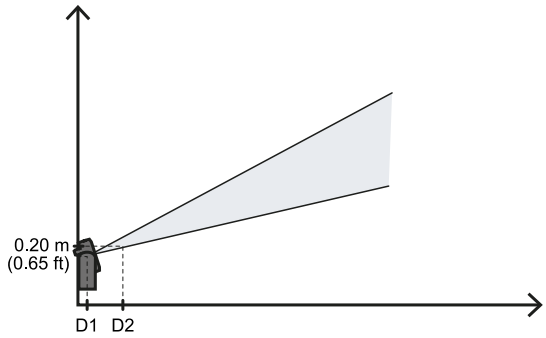

The field of view of the sensor never intersects the ground

D1 = 0

D2 = projection on the reference plane of the intersection point of the field of view at a height of 0.2 m (6.56 ft)

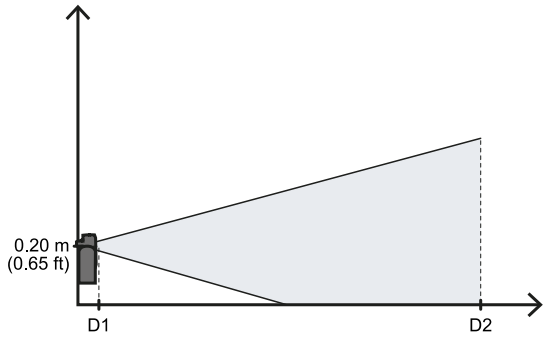

The upper portion of the field of view of the sensor never intersects the ground.

D1 = projection on the reference plane of the intersection point of the field of view at a height of 0.2 m (6.56 ft)

D2 = 5 m (16.4 ft)

6.3.9 Cuboid shape

6.3.9.1 Introduction

The cuboid shape allows you to shape each detection field as a cuboid. Starting from the standard shape of the field of view with maximum angular coverage, the cuboid is defined by its own dimensions and it can be positioned anywhere within the field of view of the sensor.

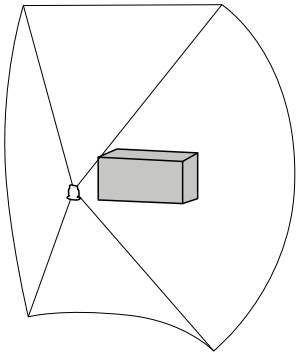

WARNING! Position the cuboid away from the limits of the field of view to avoid irregular cuboid shapes and tolerance area effects.

WARNING! A detection signal is activated only if at least 1 m (0.32 ft) of human body is detected.

6.3.9.2 Cuboid detection fields

The detection fields available for each sensor are independent of one another, and there are no constraints on the positions of the cuboids, which can overlap and/or be included within one another. An area in common with two detection fields (e.g., detection field 1 and detection field 2) belongs to the detection field with the lower numbering (detection field 1 in the previous example).

The detection field is numbered to be identified in the system and matched with the relative detection signal.

6.3.9.3 Dimensions

The x, y, and z dimensions of the cuboid can be set. The minimum values are 500 mm for the x and y dimensions, and 1000 mm for the z dimension.

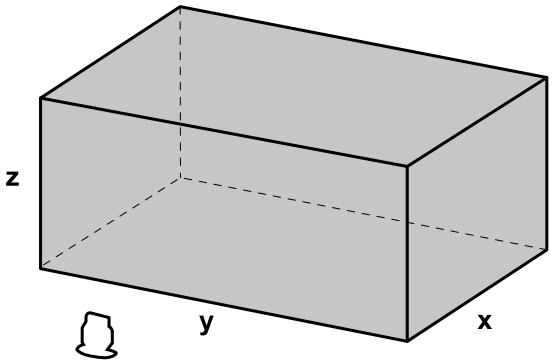

WARNING! At the limits of the cuboid, there is a tolerance area where the actual detection of a moving object/person depends on the characteristics of the object itself. Thoroughly validate the system to assess the influence of the gray area.

6.3.9.4 Cuboid line of sight

The area of the field of view from the sensor to the vertexes of the front face of the cuboid (*line of sight*) can be included or excluded from the detection field, for all the detection fields of the sensor and for a specific dynamic configuration. When included, the line of sight belongs to detection field 1.

By default, the line of sight is included. If the cuboid line of sight is excluded, graphically it is not visible in the application, and the sensor will not trigger an alarm if a movement is detected in the line of sight area.

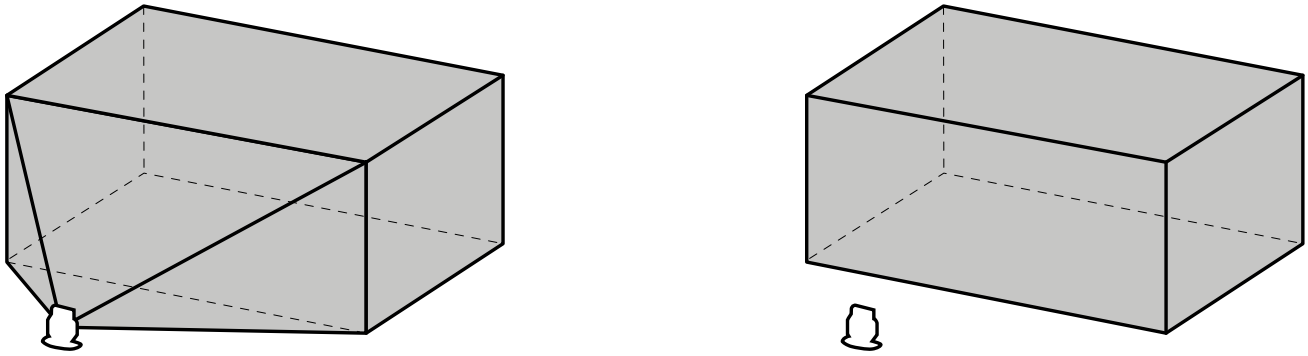

Example of a cuboid detection field with the line of sight included and excluded.

6.3.9.5 Reference plan

If there are two walking floors (reference planes) at different heights in the area to be monitored:

- if the distance (in height) between the walking floors is greater than 1 m, it is recommended to install two sensors to cover the floors.
- if the distance (in height) is less than or equal to 1 m, the reference plane to be entered during configuration is always the lower of the two planes, and the installation height should be calculated in relation to it accordingly.

6.4 Plug&Safe sensors: S202A-MS

Contents

This section includes the following topics:

6.4.1 Main features **185**
6.4.2 Installation recommendations **186**
6.4.3 Configuration parameters **186**

6.4.1 Main features

6.4.1.1 Introduction

The S202A-MS sensor is designed to perform the Safeguarding SPE (Sensitive Protective Equipment) function: detect the access of a person in a dangerous area (e.g., through a gate).

6.4.1.2 Feature list

Model-type	S202A-MS
Compatible control unit production line	eXtended Line
Safety function managed	Access detection
Safety working modes	Always-on access detection
Application	Stationary
Outdoor installation	Yes
Configuration tool	Inxpect Safety Studio
Access detection speed limit	Min: 0.1 m/s (0.33 ft/s) Max: 1.6 m/s (5.25 ft/s)
Dynamic configuration available	1
Static object detection option	No
T_{OFF}	1 s

6.4.2 Installation recommendations

6.4.2.1 General recommendations

The sensor shall always be installed following this position:

- installation height **[h]**(from the reference plane to the center of the sensor) between 1 and 2.5 m (3.3 and 8.2 ft), with an inclination (tilt) of -40°.

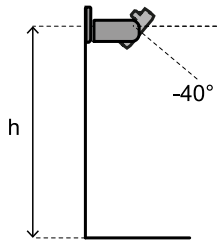

6.4.2.2 For access detection function

WARNING! Take all necessary precautions to prevent people from climbing over and entering the area, whenever there is that risk.

Below are some recommendations for the sensor positioning for the access detection function:

- If the distance between the ground and the bottom portion of the field of view is greater than 20 cm (7.9 in), take precautions to make sure that even a person entering the dangerous area below the volume monitored by the field of view is still detected.

6.4.2.3 For outdoor application

The general recommendations reported above remain valid in outdoor environments.

Position exposed to precipitation

If the sensor installation position might be exposed to precipitation that can cause undesired alarms, it is recommended to take the following precautions:

- Make a cover to protect the sensor from rain, hail, or snow, so that water droplets do not fall directly on the sensor.
- Position the sensor so that it does not frame the ground where puddles might form.

NOTICE: *Weather conditions outside specifications can prematurely age the device.*

If the monitored area is free of static objects, the system can withstand rainfall up to 10 mm/h.

Position not exposed to precipitation

If the installation position of the sensor is not exposed to precipitation, no special precautions are required.

6.4.3 Configuration parameters

6.4.3.1 Parameters table

Parameter	Min	Max	Default value	Unit of measure
Installation height	1000	2500	1000	mm
X MAX (field of view length)	500	4000	4000	mm
Z MIN (gap from the reference plane)	0	500	0	mm
Sensor rotation (pan - z)	-180	180	0	degrees
Anti-masking sensitivity	Disabled, Low, Medium, High		Low	-
Anti-masking distance	200	500	500	mm
Anti-rotation around axes	Disabled, Enabled		Disabled	-
Anti-rotation around axes - Tilt	Disabled, Enabled		Disabled	-
Anti-rotation around axes - Roll	Disabled, Enabled		Disabled	-

6.4.3.2 Detection field definition and configuration

Below is a graphic representation of the field of view and the programmable parameters.

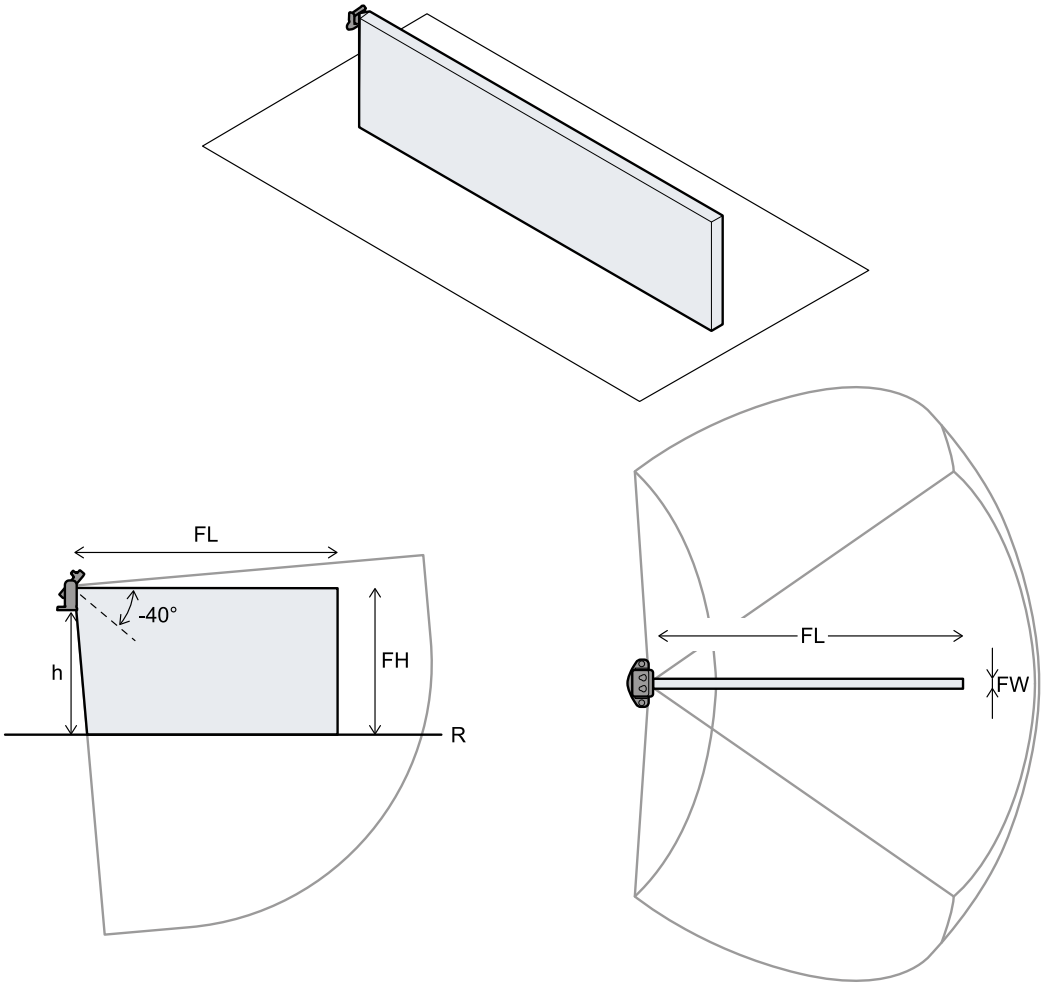

Parameter	Part	Value
Installation height (from the reference plane **R**)	**h**	From 1 to 2.5 m
Field of view length	**FL**	From the sensor to [0.5, 4] m
Field of view height (from the reference plane **R**)	**FH**	From [0, 50] cm to the sensor

The field of view width (**FW**) is fixed from -10 cm to 10 cm.

6.5 Plug&Safe sensors: S202A-MV

Contents

This section includes the following topics:

6.5.1 Main features **188**
6.5.2 Installation recommendations **188**
6.5.3 Configuration parameters **189**

6.5.1 Main features

6.5.1.1 Introduction

The S202A-MV sensor is designed to perform the Presence Sensing SPE (Sensitive Protective Equipment) function: to prevent the machinery from restarting if people are in a dangerous area (e.g., in a closed cell).

6.5.1.2 Feature list

Model-type	S202A-MV
Compatible control unit production line	eXtended Line
Safety function managed	Restart prevention
Safety working modes	Access detection and restart prevention
Application	Stationary
Outdoor installation	No
Configuration tool	Inxpect Safety Studio
Access detection speed limit	Min: 0.1 m/s (0.33 ft/s) Max: 1.6 m/s (5.25 ft/s)
Dynamic configuration available	1
Static object detection option	No

6.5.2 Installation recommendations

6.5.2.1 General recommendations

The sensor shall always be installed following this position:

- installation height **[h]** (from the reference plane to the center of the sensor) between 2.5 and 3 m (8.2 and 9.8 ft), with an inclination (tilt) of -60°.

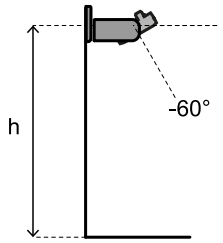

6.5.2.2 For restart prevention function

The restart prevention function is effective if the sensor can detect a person's movements or their static residual movements. To detect people who are not standing or squatting, the sensor must clearly detect the person's chest or at least a portion of 1 meter (3.28 ft) of the body.

Particular attention should be paid to the following situations:

- There are objects that limit or prevent the sensor from detecting motion.
- The sensor does not detect a sufficient portion of the body or does not properly detect the person's chest.

A validation procedure (see "Validate the safety functions" on page 75) must be performed when one or more of the above conditions are met.

If the conditions described above limit the performance of the sensor, take the following steps to reach an appropriate level of performance:

- Increase the **Restart timeout** parameter.
- Change the position of the sensors.
- Add more sensors.

If one or more of the above actions are taken, it is recommended to perform a validation procedure (see "Validate the safety functions" on page 75).

WARNING! With more than one S202A-MV sensor, two adjacent detection fields must overlap by at least 30 cm (0.98 ft).

If there are two walking floors (reference planes) at different heights in the area to be monitored:

- if the distance (in height) between the walking floors is greater than 1 m, it is recommended to install two sensors to cover the floors.
- if the distance (in height) is less than or equal to 1 m, the reference plane to be entered during configuration is always the lower of the two planes, and the installation height should be calculated in relation to it accordingly.

6.5.3 Configuration parameters

6.5.3.1 Parameters table

Parameter	Min	Max	Default value	Unit of measure
Installation height	2500	3000	2500	mm
X MAX (field of view length)	500	4000	3500	mm
Z MAX	1000	Field of view height	2000	mm
Z MIN (gap from the reference plane)	0	5000	0	mm
Y MAX (field of view width)	0*	2000	200	mm
Y MIN (field of view width)	0*	2000	200	mm
Sensor rotation (pan - z)	-180	180	0	degrees
Restart timeout	100	60000	4000	ms
Anti-masking sensitivity	Disabled, Low, Medium, High		Low	-
Anti-masking distance	200	500	500	mm
Anti-rotation around axes	Disabled, Enabled		Disabled	-
Anti-rotation around axes - Tilt	Disabled, Enabled		Disabled	-
Anti-rotation around axes - Roll	Disabled, Enabled		Disabled	-

Note*: the minimum width (left + right) is 500 mm.*

6.5.3.2 Detection field definition and configuration

Below is a graphic representation of the field of view and the programmable parameters.

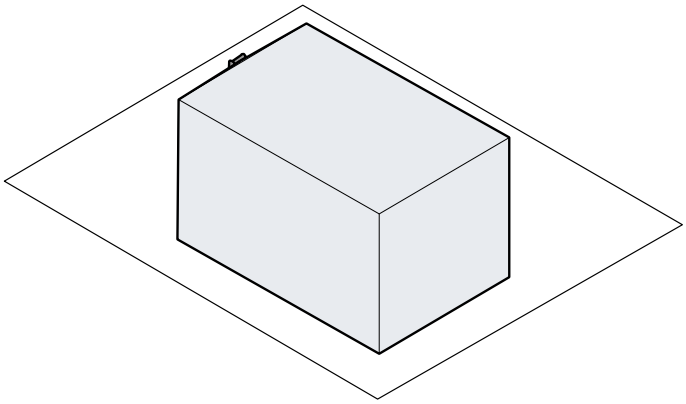

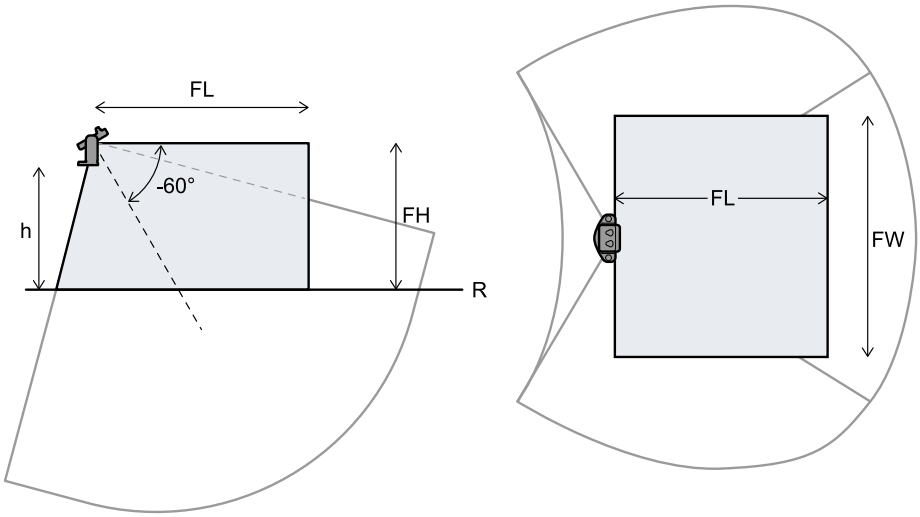

Setting	Part	Value
Sensor installation height (from the reference plane)	**h**	From 2.5 to 3 m
Field of view length	**FL**	From the sensor to [0.5, 4] m
Field of view height (from the reference plane **R**)	**FH**	From [0, 50] cm to the sensor
Field of view width	**FW**	From [-200*, 0] cm to [0, 200*] cm. Minimum: 50 cm

Note*: *value for the maximum height of installation; the value decreases proportionally with a decrease in installation height.*

7. Appendix B

7.1 Other information

Contents

This section includes the following topics:

7.1.1 System software **192**
7.1.2 Disposal **193**
7.1.3 Service and warranty **193**
7.1.4 Intellectual property **193**
7.1.5 Checklist for installing ESPE **194**

7.1.1 System software

7.1.1.1 Introduction

The aim of this appendix is to provide and clarify information about the system software. It includes the information necessary for the integrator during the installation and integration in accordance with IEC 61508-3 Annex D.

Considering that Inxpect SRE 200 Series is an embedded system with a firmware already deployed on board, no software integration is required by the system installer or by the end user. The following paragraphs analyze all the information required in IEC 61508-3 Annex D.

7.1.1.2 Configuration

The system configuration can be performed using a PC-based configuration tool (Inxpect Safety or Inxpect Safety Studio application)

The system configuration is described in "Installation and usage" on page 64.

7.1.1.3 Competence

Although no competence is required for software integration, a skilled person is required for system installation and configuration, as described in "Installation and use procedures" on page 64.

7.1.1.4 Installation instructions

The firmware is already deployed on the hardware, the PC-based configuration tool includes a self-explanatory setup installer.

7.1.1.5 Outstanding anomalies

At the moment of the issue of this document, no software/firmware anomalies or bugs are known.

7.1.1.6 Backward compatibility

Backward compatibility is guaranteed.

7.1.1.7 Change control

Any change proposal suggested by the integrator or the end user should be forwarded to Inxpect and evaluated by the Product Owner.

7.1.1.8 Implemented security measures

Firmware upgrade packages are managed by the Inxpect Technical Support and are signed to prevent the use of unverified binary files.

7.1.2 Disposal

Inxpect SRE 200 Series contains electrical parts. As set forth in European Directive 2012/19/EU, do not dispose of the product with unsorted urban waste materials.

It is the responsibility of the owner/distributor to dispose of these products, as well as other electrical and electronic equipment, through specific waste collection facilities indicated by the waste disposal services.

Correct disposal and recycling will contribute to the prevention of potentially harmful consequences to the environment and human health.

For more detailed information about disposal, contact the waste disposal services or the representative from whom you purchased the product.

For instructions on how to disassemble the components for proper, sustainable disposal, download the disassembly instructions from the https://www.inxpect.com/en/downloads website.

7.1.3 Service and warranty

7.1.3.1 Technical Support

Inxpect SpA
Via Serpente, 91
25131 Brescia (BS) - Italy
Tel: +39 030 5785105
email: safety-support@inxpect.com
website: www.inxpect.com

7.1.3.2 How to return the product

If necessary, complete the request with information about the return on the website www.inxpect.com/industrial/rma. Then, return the product to the local distributor or exclusive distributor. **Use the original packaging. Shipping costs are at the customer's expense**.

Area distributor	Manufacturer
Note distributor information here:	Inxpect SpA Via Serpente, 91 25131 Brescia (BS) Italy www.inxpect.com

7.1.3.3 Service and warranty

Refer to www.inxpect.com for the following information:

- terms, exclusions and cancellation of the warranty
- general conditions of the Return Merchandise Authorization (RMA)

7.1.4 Intellectual property

7.1.4.1 Trademarks

EtherCAT® and Safety over EtherCAT® are registered trademarks and patented technologies licensed by Beckhoff Automation GmbH, Germany.

7.1.4.2 US patents

Inxpect products are protected by the following US patents:

- US Patent #10761205
- US Patent #11402481
- US Patent #11282372
- US Patent #11422227
- US Patent #11579249
- US Patent #11835616
- US Patent #11982983

- US Patent #11846724
- US Patent #11988739
- US Patent #11041937

Other US patents are pending.

7.1.5 Checklist for installing ESPE

7.1.5.1 Introduction

Collecting the details relating to the following items is mandatory no later than when the system is commissioned for the first time.

This checklist should be kept with the machinery documentation to serve as a reference during periodic tests.

This checklist does not replace the initial commissioning or regular inspection by qualified safety personnel.

7.1.5.2 Checklist

Question	Yes	No
Have the safety rules and regulations been observed in compliance with the applicable directives and standards for the machinery?		
Are the applied directives and standards listed in the declaration of conformity?		
Does the ESPE comply with the required PL/SIL claim limit and PFHd in accordance with EN ISO 13849-1/EN 62061 and the required type in accordance with EN 61496-1?		
Is access to the dangerous area only possible through the detection field of the ESPE?		
Have appropriate measures been taken to detect any persons in the dangerous area?		
Have the safety devices been secured or locked to prevent their removal?		
Are additional mechanical protective measures fitted and secured against manipulation which prevent reaching below, above, or around the ESPE?		
Has the maximum stopping time of the machinery been measured, specified, and documented?		
Has the ESPE been mounted such that the required minimum distance from the nearest hazardous point has been achieved?		
Are the ESPE devices properly mounted and secured against manipulation after adjustment?		
Are the required protective measures against electric shock in effect (protection class)?		
Is the control switch for resetting the protective devices (ESPE) or restarting the machinery present and correctly installed?		
Are the outputs of the ESPE integrated according to the required PL/SIL in accordance with EN ISO 13849-1/EN 62061, and does the integration correspond to the circuit diagrams?		
Has the protective function been checked in compliance with the test notes of this documentation?		
Are the specified protective functions effective at every operating mode that can be set?		
Does the ESPE activate the switching elements?		
Is the ESPE effective over the entire period of the dangerous state?		
Once initiated, will a dangerous state be stopped when switching the ESPE on or off, when changing the operating mode, or when switching to another protective device?		

Inxpect SRE 200 Series
Instruction manual v1.12
JUL 2026
Inxpect SAF-IM-200S_7_00047_en_v1.12
Copyright © 2021-2026 Inxpect SpA

Inxpect SpA
Via Serpente, 91
25131 Brescia (BS)
Italy
www.inxpect.com
safety-support@inxpect.com
+39 030 5785105