# 20 A

## DECONTACTOR™ DXN1 ZONE 1-21

**U MAX**
550 V AC
550 V DC

MARECHAL ELECTRIC FRANCE
Ex II 2 G D — Ex db eb IIC T* Gb — Ex tb IIIC T* Db
*-40 °C ≤ Ta ≤ +60 °C — T5 — T90 °C
-40 °C ≤ Ta ≤ +40 °C — T6 — T70 °C
IECEx LCI 09.0005X/LCIE 99 ATEX 6027 X

INSTRUCTIONS FOR USE

METAL VERSION AVAILABLE SOON

**IN-LINE CONNECTIONS TO ORDER**
A pair of finger draw plates to aid closing
**Reference 611A346**

| IP66 IP67 | 1-4 mm² (1) 1,5-6 mm² (2) | GRP | IK09 | -40 °C +60 °C | AC-22A/AC-23A DC-21A | ATEX | 1, 2, 21, 22 |
|---|---|---|---|---|---|---|---|

(1) Flexible wiring (min.-max.).
(2) Stranded wiring (min.-max.).

**Other configurations on request.**

| TEMPERATURE RATING | |
|---|---|
| Gas temperature classes | T6 for an ambient T° between -40 °C and +40 °C |
| | T5 for an ambient T° between -40 °C and +60 °C |
| Dust surface temperature classes | Surface T° ≤ 70 °C for an ambient T° between -40 °C and +40 °C |
| | Surface T° ≤ 90 °C for an ambient T° between -40 °C and +60 °C |

| STANDARDS | |
|---|---|
| International and European IEC/EN standards | 60079-0, 60079-1, 60079-7, 60079-31, 60309-1, 60309-4, 60947-3 |
| Type of protection | db eb, tb |

| LOAD-BREAK CAPABILITY OF THE DECONTACTOR™ | |
|---|---|
| Load-break capability according to IEC/EN 60947-3/AC-22A | 20 A/550 V |
| Load-break capability according to IEC/EN 60947-3/AC-23A | 20 A/440 V |
| Load-break capability according to IEC/EN 60947-3/DC-21A | 20 A/250 V |

**Each socket-outlet or inlet must be associated with a box, a sleeve or a handle.**

| | | **SOCKET-OUTLET** female **DXN1** | **INLET*** male **DXN1** |
|---|---|---|---|
| 20-24 V AC | 2P | 251408A | 251808A |
| 190-250 V AC | 1P+N+E | 2514015 | 2518015 |
| 380-440 V AC | 3P+E | 2514013 | 2518013 |
| 380-440 V AC | 3P+N+E | 2514017 | 2518017 |
| 480-500 V AC | 3P+E | 2514093 | 2518093 |
| 480-500 V AC | 3P+N+E | 2514097 | 2518097 |

▶ Other currents, voltages, frequencies and contact configurations are available (see page 21).
* inlet cap included.



| OPTIONS | Reference |
|---|---|
| **LOCKING PIN FOR 2 PADLOCKS Ø 4 TO 8 mm (PADLOCK NOT SUPPLIED)** | Socket-outlet ref. + 843 |
| **SAFETY HASP FOR UP TO 6 PADLOCKS** | 613A541 |
| **LARGER RELEASE BUTTON** | Socket-outlet ref. + 453 |
| **INLET CAP IP66/IP67** | 251A426 |
| **SELF CLOSING/SELF RETURNING LID** | Socket-outlet ref. + R |
| **COMPATIBILITY WITH DSN SOCKET-OUTLET (INDUSTRIAL RANGE)** | Contact us. |
| **SELF-EJECTION** | See page 208 |

| WALL BOX | Incline angle | Input/Cable outer Ø | Reference |
|---|---|---|---|
| **WALL BOX POLY WITH EX POLY CABLE GLAND** | | | |
| | 30° | 5-10 mm | 251AB5316P |
| | 30° | 10-14 mm | 251AB53 |
| | 30° | 12-18 mm | 251AB5325P |
| **WALL BOX POLY WITHOUT CABLE GLAND** | | | |
| | 30° | M20 | 251AB53417 |
| | 30° | M25 | 251AB53418 |
| **WALL BOX POLY WITH EX POLY CABLE GLAND** | | | |
| 120 X 120 mm | 70° | 10-14 mm | 251AB8820P |
| | 70° | 12-18 mm | 251AB8825P |
| | 70° | 16-25 mm | 251AB8832P |
| **WALL BOX POLY WITH METAL CABLE GLAND WITH EARTH CONTINUITY** | | | |
| 120 X 120 mm | 70° | 8-10 mm | 251AB8820M |
| | 70° | 12-14 mm | 251AB8825M |
| | 70° | 18-24 mm | 251AB8832M |
| **WALL BOX POLY WITH TERMINAL BLOCKS (IECEx LCIE 16.0042X/LCIE 16 ATEX 3054X) P. 326** | | | |
| 120 X 120 mm | 70° | 10-14 mm | 251A08820P[1] |
| | 70° | 12-18 mm | 251A08825P[1] |

1. Delivered with two predrilled entries fitted with 1 cable gland and 1 stopping plugs, 8+2 terminals up to 4 mm² with 2.5 mm² wires. Wiring : 1-4 mm². For other configurations, contact us.

| HANDLES | Cable outer Ø | Reference |
|---|---|---|
| **POLY HANDLE WITH GLAND EX POLY** | | |
| | 10-14 mm | 251A753 |
| | 12-18 mm | 251A25325P |
| | 16-25 mm | 251A25332P |
| **POLY HANDLE WITH EX POLY GLAND FOR SELF-EJECTION OPTION** | | |
| | 10-14 mm | 251A463 |
| | 12-18 mm | 251A44325P |
| **STRAIGHT POLY HANDLE WITH METAL CABLE GLAND WITH EARTH CONTINUITY** | | |
| | 8-10 mm | 251A25320M |
| | 12-14 mm | 251A25325M |
| | 18-24 mm | 251A25332M |

| SLEEVE | Incline angle | Reference |
|---|---|---|
| **INCLINED POLY SLEEVE** | | |
| | 30° | 251A057 |
| | 70° | 251A757 |

# DRAWINGS AND DIMENSIONS

DOWNLOAD THE DRAWINGS ON OUR WEBSITE
marechal.com

## PLUG ON SOCKET-OUTLET

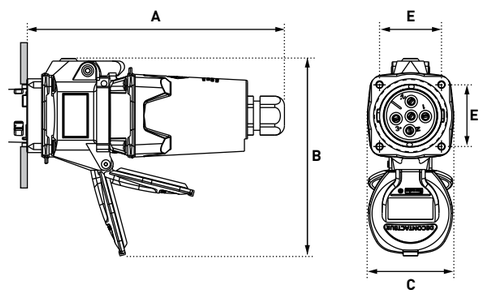


| A | B | C | E |
|---|---|---|---|
| 165 | 134 | 58 | 42 |

## COUPLER

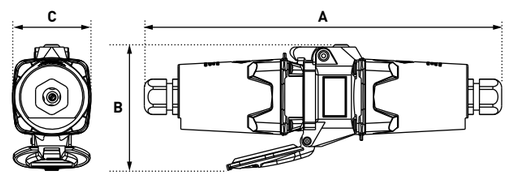


| A | B | C |
|---|---|---|
| 266 | 89 | 58 |

## PLUG ON 30° WALL MOUNTED SOCKET-OUTLET

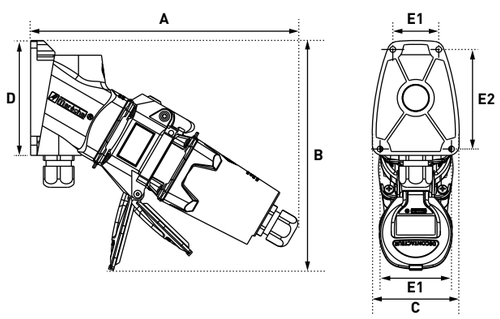


| A | B | C | D | E1 | E2 |
|---|---|---|---|---|---|
| 209 | 180 | 68 | 90 | 36/56 | 79 |

## PLUG ON 70° WALL-MOUNTED SOCKET-OUTLET

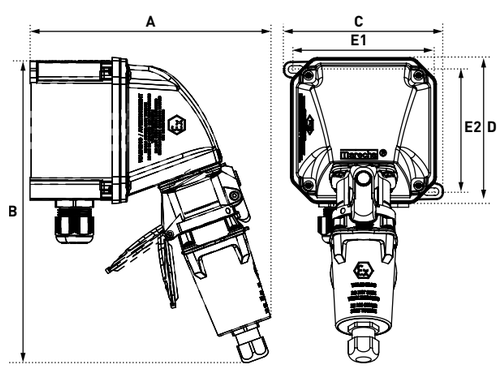


| A | B | C | D | E1 | E2 |
|---|---|---|---|---|---|
| 208 | 264 | 138 | 126 | 117 | 105.5 |





## PLUG ON 30° INCLINED SOCKET-OUTLET

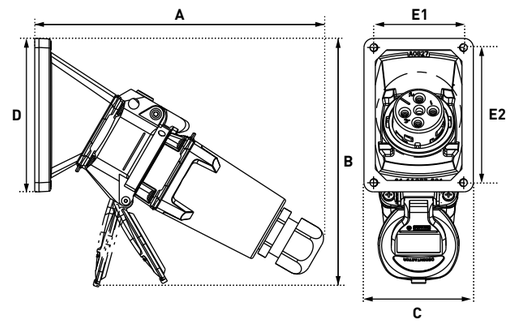


| A | B | C | D | E1 | E2 |
|---|---|---|---|---|---|
| 203 | 175 | 77 | 108 | 64 | 96 |

## PLUG ON 70° INCLINED SOCKET-OUTLET

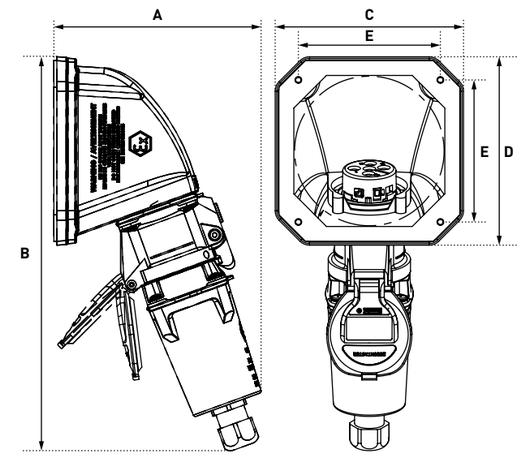


| A | B | C | D | E |
|---|---|---|---|---|
| 139 | 264 | 126 | 126 | 95 |